TAG: _____

SUBMITTAL

15 SERIES

Single Zone Mini-Split Inverter System

M4MCW1512A1N0B
M4TCS1512A11NB

Specifications

MODEL - Cooling Only	M4MCW1512A / M4TCS1512A
RATED Volts/PH	208 / 230 / 1
Frequency (Hz)	60Hz
Rated Cooling Capacity (Btu/h):	12000
Minimum Cooling Capacity (@95F) (Btu/h):	3700
Maximum Cooling Capacity (@95F) (Btu/h):	12500
Total Capacity (W) (High/Standard/Low):	3600 / 3500 / 1100
Rated Power Input (W)	1300
Nominal Input Current (A)	5.8
SEER	15.0
Air Flow Volume (CFM) (SH/H/M/L)	390 / 310 / 240 / 190
Dehumidifying Volume (pt./h)	2.96
EER (Btu/W hr)	9.25

Indoor Unit	M4MCW1512A1N0B
Fan Motor Speed (r/min) (SH/H/M/L)	1350 / 1200 / 1000 / 800
Fan Motor RLA(A)	0.31
Evaporator	Aluminum Fin-Copper Tube
Pipe Diameter (inch)	1/5
Row Fin Gap (inch)	2 - 1/18
Coil length (L) x depth (D) x coil width (W) (inch)	25 × 7/8 × 12 1/16
Output of Swing Motor (W)	1.5
Fuse (A)	3.15
Sound Power Level dB (A)(SH/H/M/L)	55 / 49 / 45 / 39
Sound PRESSURE Level dB (A)(SH/H/M/L) ①	45 / 39 / 35 / 29
Uncrated Dimension (W/H/D) (inch)	33 1/4 x 11 3/8 x 8 2/9
Crated Dimension of Package (L/W/H) (inch)	36 1/4 x 11 x 15
Net Weight /Gross Weight (lbs)	23.1 / 28.7

Outdoor Unit	M4TCS1512A11NB
Compressor Type	Swing Rotary
Compressor Oil	DAPHNE FVC50K (PVE Oil)
L.R.A. (A)	16.5
Compressor RLA(A)	6.60
Compressor Power Input(W)	845
Throttling Method	Capillary
Working Temp Range (°F)	0 - 115
Condenser	Aluminum Fin-Copper Tube
Pipe Diameter (inch)	2/7
Row Fin Gap (inch)	2 - 1/18
Coil length (L) x depth (H) x coil width (W) (inch)	28 × 1 1/2 × 20
Fan Motor Speed (rpm)	820±20
Output of Fan Motor (W)	30
Fan Motor RLA (A)	0.37
Air Flow Volume of Outdoor Unit (CFM)	942
Fan Diameter (inch)	15 3/4
Defrosting Method	Automatic Defrosting
Sound Power Level dB (A)	63
Sound PRESSURE Level dB (A) ①	53
Uncrated Dimension (W/H/D) (inch)	30 5/9 x 21 1/4 x 12 3/5
Crated Dimension of Package (L/W/H) (inch)	33 1/2 x 14 2/7 x 23 3/7
Net Weight /Gross Weight (lbs)	70.6 / 76.1
Refrigerant Charge (oz)	30.0
MCA	9.0
MOP	15.0

Connection Pipe	
Gas additional charge(oz/ft)	0.2
Outer Diameter Liquid Pipe (inch)	1/4
Outer Diameter Gas Pipe (inch)	3/8
Max Height Distance (ft)	65
Max Length Distance (ft)	100

① Sound PRESSURE Level @ 3.3 ft. dB(A)

©2019 Trane All Rights Reserved

Unit Dimensions

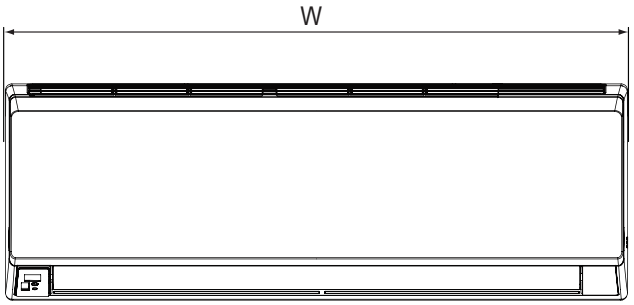

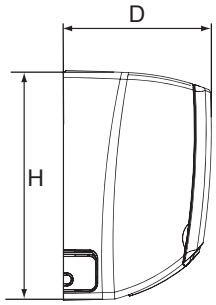

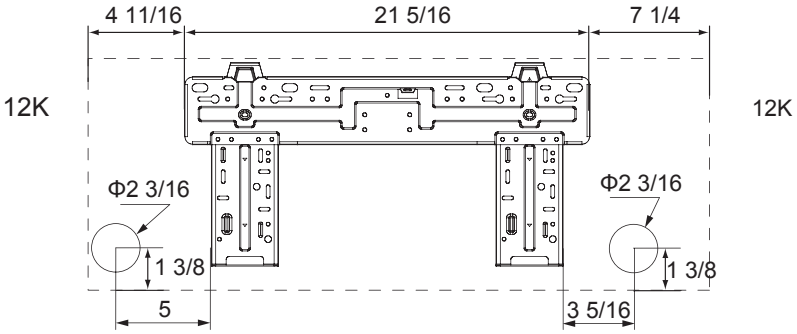

Unit: inch

MODEL	W	H	D
09K	31 1/8	10 5/6	7 7/8
12K	33 1/4	11 3/8	8 1/4

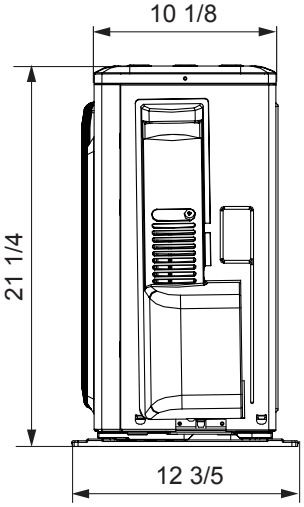

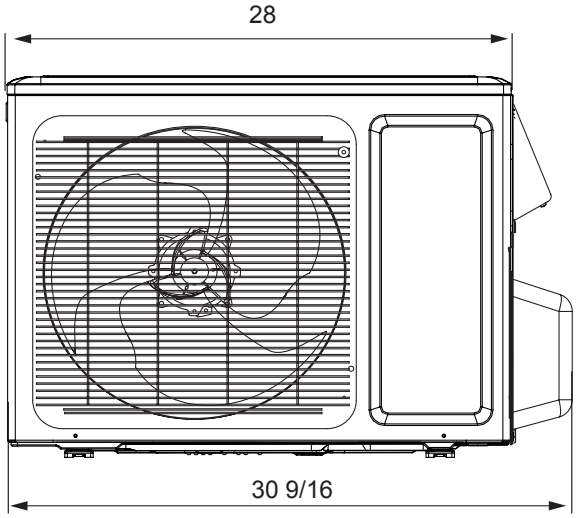

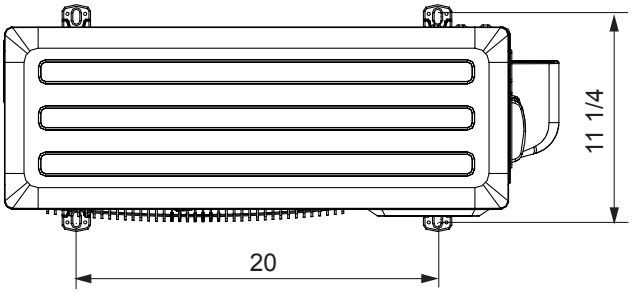

Clearance Requirements

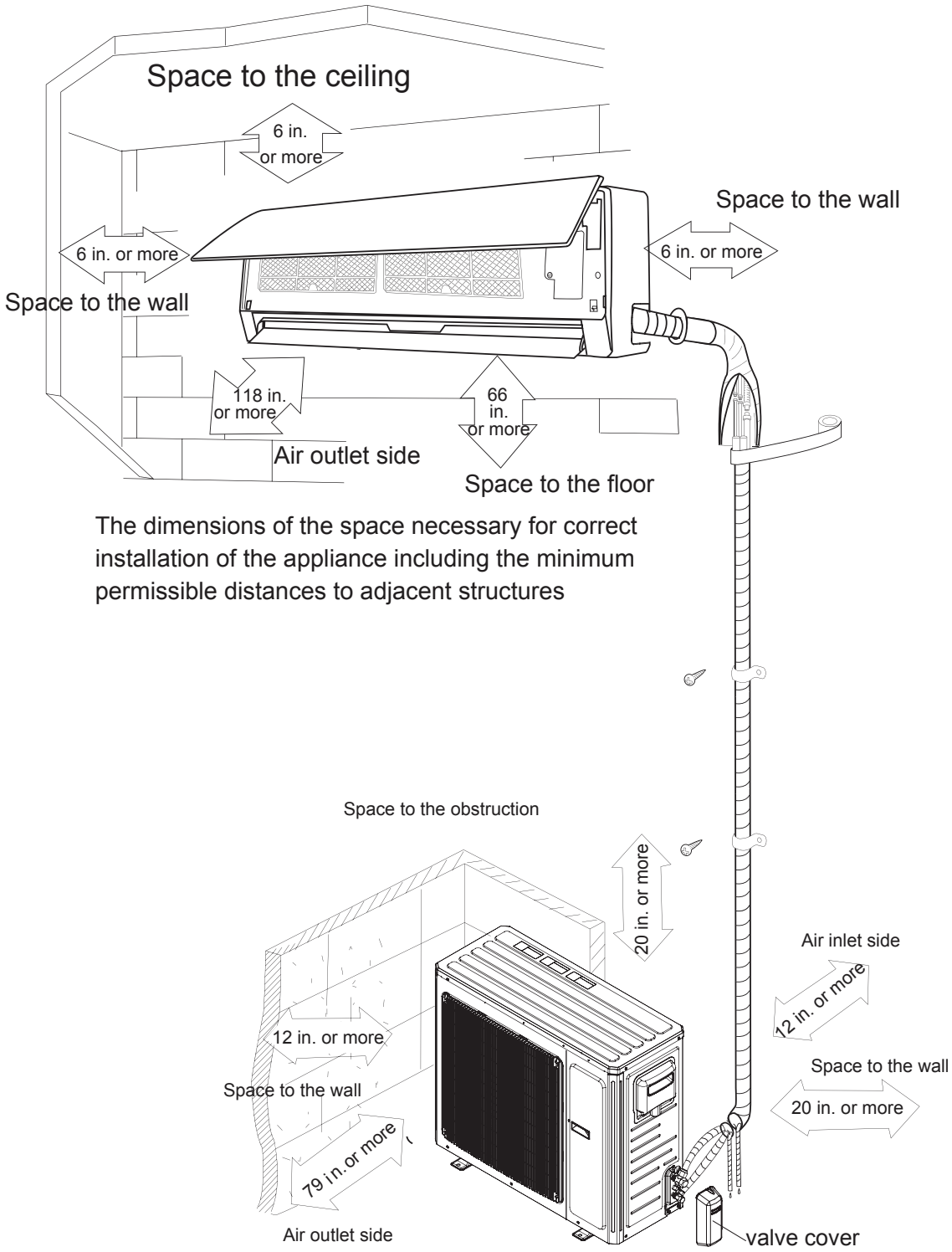

The dimensions of the space necessary for correct installation of the appliance including the minimum permissible distances to adjacent structures

NOTE:
The maximum recommended height from the floor to the bottom of the indoor unit is 11.5 ft. (3.5 m).

Air Velocity Patterns for High Wall		
Max Horizontal Distance		
Unit: ft. (m)		
Model	Cooling Mode	Heating Mode
M4MCW1512A	29.5 (9)	N/A

Performance Data

Cooling Capacity 12,000 (Bthu/h)
M4MCW1512A1/M4TCS1512A

Outdoor Ambient Air Temperature (°F)	68/57°F		73/61°F		80/67°F		82/68°F	
	TC*	SHC**	TC	SHC	TC	SHC	TC	SHC
0	5100	4000	5400	4200	6700	5200	6600	5100
10	7000	5500	7400	5800	8500	6700	8800	6900
20	7800	6100	8300	6500	9400	7400	9800	7700
30	8300	6500	8900	6900	10100	8000	10600	8300
40	10000	7900	10700	8400	11800	9200	12800	10000
50	11600	9100	12300	9600	13100	10300	14100	11100
60	11400	8900	12100	9500	13000	10200	13900	10900
70	11100	8700	11800	9300	12800	10100	13700	10700
80	10800	8500	11500	9000	12600	9900	13500	10600
90	10500	8200	11200	8800	12300	9600	13300	10400
100	10000	7900	10700	8400	11900	9300	12900	10100
110	9500	7400	10200	8000	11400	8900	12300	9700
120	8900	7000	9600	7500	10900	8500	11800	9200

*Total Capacity **Sensible Heat Capacity

Capacities in these performance tables reflect normal operation at the temperatures indicated. See specification tables above for certified values under prescribed test conditions.

Mechanical Specifications

Mini–Split Outdoor Unit

General

This unit is fully charged from the factory for up to 25 feet of piping. This unit is designed to operate at outdoor ambient temperatures as high as 115°F. Cooling capacities with the mini-split air handler shown in the catalog are AHRI certified. The unit is ETL listed for outdoor application.

Unit Casing

The unit casing is constructed of heavy gauge, galvanized steel and painted with a weather-resistant powder paint.

Refrigerant Controls

Refrigeration system controls include condenser fan and compressor relay. High and low pressure controls are inherent to the compressor. A suction line multi function service valve is standard

Compressor

The compressor features internal over temperature and pressure protection; total dipped hermetic motor windings. Other features include: centrifugal oil pump and low vibration and noise.

Condenser Coil

The coil shall consist of aluminum finned coils brazed to copper tubing. The coil provides air flow resistance and efficient heat transfer. The coil is protected by the casing.

Low Ambient Cooling

Matched ductless products, have cooling capabilities at outdoor ambient temperatures as low as 0° F.

Mini–Split Indoor High Wall

General

The High Wall mounted type air handler shall be completely factory assembled including coil, condensate drain pan, fan motor, washable filter, air purifying filter and electric controls to be used with a wireless remote controller. Unit shall be shipped with a unit mounting plate. Unit shall be matched with an outdoor unit, rated and tested in accordance with AHRI standard. Unit shall be ETL listed.

Unit Casing

Casing shall be provided with knockouts on the right, and left of the unit to facilitate piping and electrical connection on either side of the unit. An electrical service cover shall be provided to permit easy access to the electrical terminal strip.

Discharge Airflow and Distribution System

Unit shall have auto swing, dual horizontal blades to optimize the aperture outlet for vertical airflow and air distribution. Blade shall close automatically when the air conditioner is turned off to minimize dust entering the unit. Five-Step preset program on the remote controller shall be available to control the blade angle.

Manually adjusted wide-angle louvers shall be provided to adjust the coverage and direction of airflow.

Controls

Units shall have the capability to be controlled remotely through wall-mounted wired options **(sold separately)** as well as a wireless remote option.

Remote Controller

The unit shall have a wireless infrared remote controller with easy reading digital display panel to start, stop and regulate the air conditioner from a distance.

The wireless controller is included with all units.

Healthy Filters

The unit shall have an active carbon and catechin filter with the unit.The filters need to be cleaned at least once a year.

Trane
6200 Troup Highway
Tyler, TX 75707
www.trane.com

12/19

The manufacturer has a policy of continuous product and product data improvement and it reserves the right to change design and specifications without notice.