Service Facts

Split System Heat Pump

A4HP4018A1000A

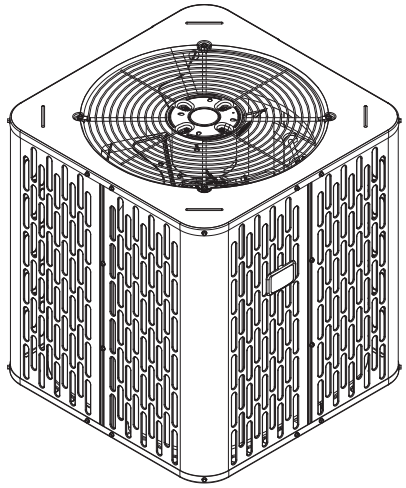

Note: *"Graphics in this document are for representation only. Actual model may differ in appearance."*

⚠ SAFETY WARNING

Only qualified personnel should install and service the equipment. The installation, starting up, and servicing of heating, ventilating, and air-conditioning equipment can be hazardous and requires specific knowledge and training. Improperly installed, adjusted or altered equipment by an unqualified person could result in death or serious injury. When working on the equipment, observe all precautions in the literature and on the tags, stickers, and labels that are attached to the equipment.

April 2020

A4HP4018-SF-1B-EN

SAFETY SECTION

Important — This document contains service information. This is customer property and is to remain with this unit. Please return to service information pack upon completion of work.

⚠ WARNING

HAZARDOUS VOLTAGE!

Failure to follow this Warning could result in property damage, severe personal injury, or death.

Disconnect all electric power, including remote disconnects before servicing. Follow proper lockout/tagout procedures to ensure the power cannot be inadvertently energized.

⚠ WARNING

REFRIGERANT OIL!

Failure to follow this Warning could result in property damage, severe personal injury, or death.

These units use R-410A refrigerant which operates at 50–70% higher pressures than R-22. Use only R-410A approved service equipment. Refrigerant cylinders are painted a "Rose" color to indicate the type of refrigerant and may contain a "dip" tube to allow for charging of liquid refrigerant into the system. All R-410A systems use a POE oil that readily absorbs moisture from the atmosphere. To limit this "hydroscopic" action, the system should remain sealed whenever possible. If a system has been open to the atmosphere for more than 4 hours, the compressor oil must be replaced. Never break a vacuum with air and always change the driers when opening the system for component replacement. For specific handling concerns with R-410A and POE oil, reference Retrofit Bulletin TRN-APG02–EN.

⚠ CAUTION

HOT SURFACE!

May cause minor to severe burning. Failure to follow this Caution could result in property damage or personal injury.

Do not touch top of compressor.

⚠ CAUTION

CONTAINS REFRIGERANT!

Failure to follow proper procedures can result in personal illness or injury or severe equipment damage.

System contains oil and refrigerant under high pressure. Recover refrigerant to relieve pressure before opening system.

⚠ CAUTION

GROUNDING REQUIRED!

Failure to inspect or use proper service tools may result in equipment damage or personal injury.

Reconnect all grounding devices. All parts of this product that are capable of conducting electrical current are grounded. If grounding wires, screws, straps, clips, nuts, or washers used to complete a path to ground are removed for service, they must be returned to their original position and properly fastened.

⚠ WARNING

SERVICE VALVES!

Failure to follow this warning will result in abrupt release of system charge and may result in personal injury and/or property damage.

Extreme caution should be exercised when opening the Suction and Liquid Line Service Valve. Turn valve stem counterclockwise only until the stem contacts the rolled edge. No torque is required.

⚠ WARNING

BRAZING REQUIRED — IF USING MECHANICAL CONNECTIONS, ENSURE LEAK TEST IS NEGATIVE!

Failure to inspect lines or use proper service tools may result in equipment damage or personal injury.

if using existing refrigerant lines make certain that all joints are brazed, not soldered.

⚠ WARNING

Warning!

This product can expose you to chemicals including lead which are known to the State of California to cause cancer and birth defects or other reproductive harm.

For more information go to www.P65Warnings.ca.gov

Important: *If using other than copper pipe, follow manufacturer's installation instructions. Joints must be brazed or other UL/IMC/ URMC approved joint that meets pressure requirements.*

©2020

Product Specifications

OUTDOOR UNIT [a] [b]	A4HP4018A1000A
POWER CONNS. — V/PH/HZ [c]	208/230/1/60
MIN. CIR. AMPACITY	12
MAX. OVERCURRENT PROTECTION	20
COMPRESSOR	SCROLL
NO. USED — NO. STAGES	1 — 1
VOLTS/PH/HZ	208/230/1/60
R.L. AMPS [d] — L.R. AMPS	9 — 56
FACTORY INSTALLED	
START COMPONENTS [e]	NO (Uses BAYKSKT267)
INSULATION/SOUND BLANKET	NO
COMPRESSOR HEAT	NO
OUTDOOR FAN	PROPELLER
DIA. (IN.) — NO. USED	19.1
TYPE DRIVE — NO. SPEEDS	DIRECT — 1
CFM @ 0.0 IN. W.G. [f]	2170
NO. MOTORS — HP	1 — 1/12
MOTOR SPEED R.P.M.	810
VOLTS/PH/HZ	208/230/1/60
F.L. AMPS	0.54
OUTDOOR COIL — TYPE	ALL ALUMINUM
ROWS — F.P.I.	1 — 24
FACE AREA (SQ. FT.)	13.44
TUBE SIZE (IN.)	3/8
REFRIGERANT CONTROL	EXPANSION VALVE
REFRIGERANT	
LBS. — R-410A (O.D. UNIT) [g]	6 LBS., 1 OZ
FACTORY SUPPLIED	YES
LINE SIZE — IN. O.D. GAS [h] [i]	3/4
LINE SIZE — IN. O.D. LIQ.	3/8
CHARGING SPECIFICATIONS	
SUBCOOLING	10°F
DIMENSIONS	H X W X D
CRATED (IN.)	31.7 x 26.9 x 26.9
WEIGHT	
SHIPPING (LBS.)	167
NET (LBS.)	143

[a] Certified in accordance with the Air-Source Unitary Air-conditioner Equipment certification program, which is based on AHRI standard 210/240.
[b] Rated in accordance with AHRI standard 270.
[c] Calculated in accordance with Natl. Elec. Codes. Use only HACR circuit breakers or fuses.
[d] This value shown for compressor RLA on the unit nameplate and on this specification sheet is used to compute minimum branch circuit ampacity and max. fuse size. The value shown is the branch circuit selection current.
[e] No means no start components. Yes means quick start kit components. PTC means positive temperature coefficient starter. Optional kit shown.
[f] Standard Air — Dry Coil — Outdoor
[g] This value approximate. For more precise value see unit nameplate.
[h] Reference the outdoor unit ship-with literature for refrigerant piping length and lift guidelines. Reference the refrigerant piping software pub # 32-3312-xx or refrigerant piping application guide SS-APG006-xx for long line sets or specialty applications (xx denotes latest revision).
[i] The outdoor condensing units are factory charged with the system charge required for the outdoor condensing unit, ten (10) feet of tested connecting line, and the smallest rated indoor evaporative coil match. Always verify proper system charge via subcooling (TXV/EEV) or superheat (fixed orifice) per the unit nameplate.

Wiring Diagrams

Figure 1. 1.5, 2.0, 2.5 & 3.5 Ton Models

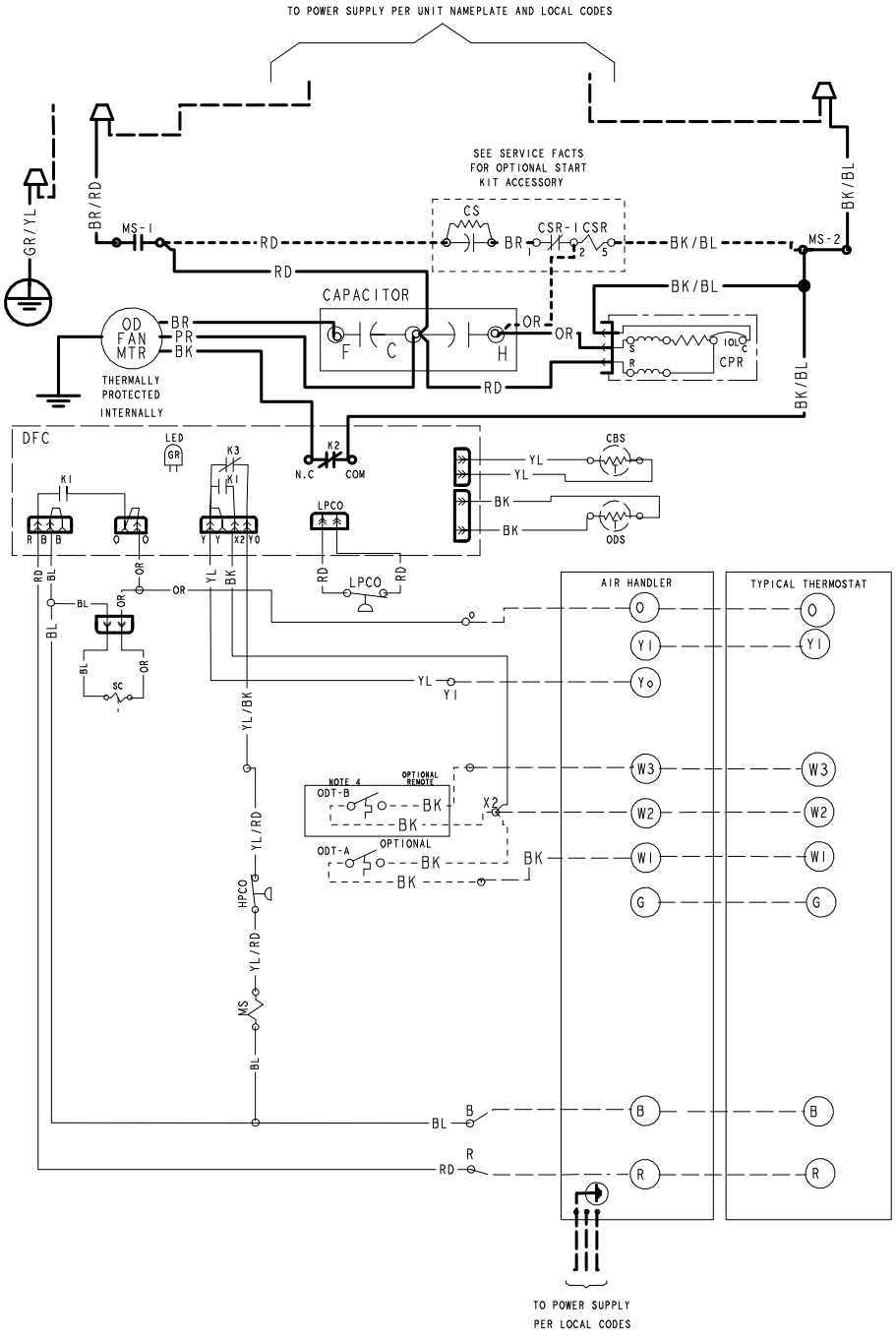

NOTES:

1. BE SURE POWER SUPPLY AGREES WITH EQUIPMENT NAMEPLATE.
2. POWER WIRING AND GROUNDING OF EQUIPMENT MUST COMPLY WITH LOCAL CODES.
3. LOW VOLTAGE WIRING TO BE NO. 18 AWG MINIMUM CONDUCTOR.
4. ODT-B MUST BE SET LOWER THAN ODT-A

ACR	A/C RECTIFIER
CBS	COIL BOTTOM SENSOR
CF	FAN CAPACITOR
CN	WIRE CONNECTOR
CPR	COMPRESSOR
CR	RUN CAPACITOR
CS	STARTING CAPACITOR
CSR	CAPACITOR SWITCHING RELAY
DFC	DEFROST CONTROL
EEV	ELECTRONIC EXP VALVE
EEVC	ELECTRONIC EXP VALVE CONTROL
F	INDOOR FAN RELAY
HPCO	HIGH PRESSURE CUTOUT SWITCH
IOL	INTERNAL OVERLOAD PROTECTOR
LPCO	LOW PRESSURE CUTOUT SWITCH
MS	COMPRESSOR MOTOR CONTACTOR
ODA	OUTDOOR ANTICIPATOR
OFT	OUTDOOR FAN THERMOSTAT
ODS	OUTDOOR TEMPERATURE SENSOR
ODT	OUTDOOR THERMOSTAT
P-TRD	PRESSURE TRANSDUCER
SC	SWITCH OVER VALVE SOLENOID
SM	SYSTEM ON-OFF SWITCH
TDL	DISCHARGE LINE THERMOSTAT
TDR	TIME DELAY RELAY (5 SEC DELAY ON)
TNS	TRANSFORMER
TEMP	SENSOR, TEMPERATURE
Y2C	HIGH CAPACITY CONTROL RELAY

COLOR OF WIRE
BK/BL
COLOR OF MARKER

BK	BLACK	RD	RED	OR	ORANGE
BL	BLUE	WH	WHITE	GR	GREEN
BR	BROWN	YL	YELLOW	PR	PURPLE
PK	PINK				

POL. PLUG FEMALE HOUSING (MALE TERMINALS)
POL. PLUG MALE HOUSING (FEMALE TERMINALS)

Drw. D160661P02_RevA

Figure 2. 1.5, 2.0, 2.5 & 3.5 Ton Models

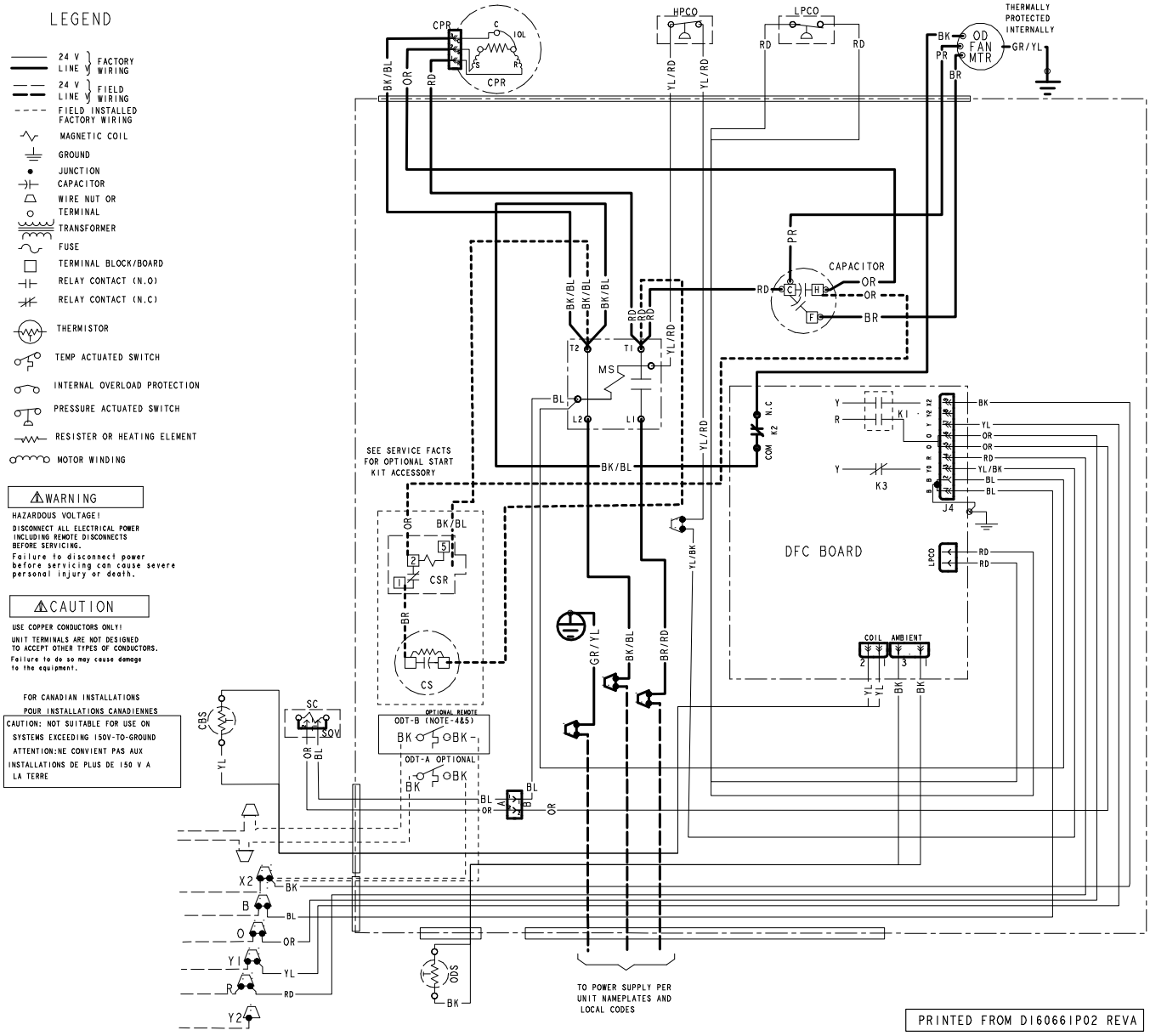

Subcooling Charging in Cooling between 55° F and 120° OD Ambient

The manufacturer has always recommended installing approved matched indoor and outdoor systems.

The benefits of installing approved indoor and outdoor split systems are maximum efficiency, optimum performance and the best overall reliability.

The following charging methods are therefore prescribed for matched systems with indoor TXVs / EEVs.

(Systems can be rated with TXV, EEV or Piston. Ensure charging method is correct).

1. Subcooling (in the cooling mode) is the only recommended method of charging above 55° ambient temperatures.
2. For best results — the indoor temperature should be kept between 70° to 80° F. Add system heat if needed.
3. At startup, or whenever charge is removed or added, the system must be operated for a minimum of (20) minutes to stabilize before accurate measurements can be made.
4. Measure Liquid Line Temperature and Refrigerant Pressure at service valves.
5. Determine total refrigerant line length, and height (lift) if indoor section is above the condenser.
6. Determine the Design Subcooling Charging Temperature from the unit nameplate.
7. Locate this value in the appropriate column of the Subcooling Charging Table. Locate your liquid line temperature in the left column of the table, and the intersecting liquid line pressure under your nameplate subcool value column. Add refrigerant to raise the pressure to match the table, or remove refrigerant to lower the pressure. Again, wait (20) minutes for the system conditions to stabilize before adjusting charge again.
8. When system is correctly charged, you can refer to System Pressure Curves to verify typical performance.

Subcool Charging Correction Charts

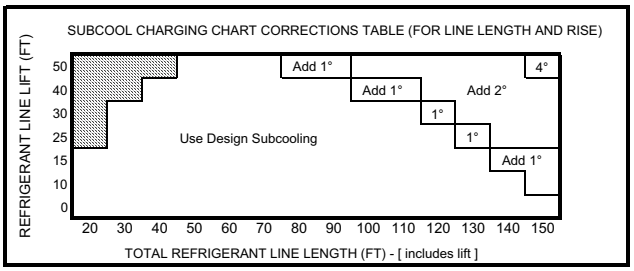

Weigh-In Method for Charging

Weigh-In Method can be used for the initial installation, or anytime a system charge is being replaced. Weigh-In Method can also be used when power is not available to the equipment site or operating conditions (indoor/ outdoor temperatures) are not in range to verify with the subcooling charging method.

Calculating Charge Using the Weigh-In Method		
STEP 1 - Measure in feet the distance between the outdoor unit and the indoor unit. (Include the entire length of the line from the service valve to the IDU.) Subtract 10 ft from this entire length and record on line 1.	1. Total Line Length (ft) – 10 ft	
STEP 2 - Enter the charge multiplier (0.6 oz/ft). Each linear foot of interconnecting tubing requires the addition of 0.6 oz of refrigerant.	2. Charge multiplier	x 0.6 oz
STEP 3 - Multiply the total length of refrigerant tubing (Line 1) times the value on Step 2. Record the result on Line 3 of the Worksheet.	3. Step 1 x Step 2	= _____-____
STEP 4 - This is the amount of refrigerant to weigh-in prior to opening the service valves.	4. Refrigerant (oz)	= _____-___oz

Refrigerant Charging Chart

R-410A REFRIGERANT CHARGING CHART							
LIQUID TEMP (°F)	DESIGN SUBCOOLING (°F)						
	8	9	10	11	12	13	14
	LIQUID GAGE PRESSURE (PSI)						
55	179	182	185	188	191	195	198
60	195	198	201	204	208	211	215
65	211	215	218	222	225	229	232
70	229	232	236	240	243	247	251
75	247	251	255	259	263	267	271
80	267	271	275	279	283	287	291
85	287	291	296	300	304	309	313
90	309	313	318	322	327	331	336
95	331	336	341	346	351	355	360
100	355	360	365	370	376	381	386
105	381	386	391	396	402	407	413
110	407	413	418	424	429	435	441
115	435	441	446	452	458	464	470
120	464	470	476	482	488	495	501
125	495	501	507	514	520	527	533

Defrost Control

Defrost Control

The demand defrost control measures heat pump outdoor ambient temperature with a sensor located outside the outdoor coil. A second sensor located on the outdoor coil is used to measure the coil temperature. The difference between the ambient and the colder coil temperature is the difference or delta-T measurement. This delta-T measurement is representative of the operating state and relative capacity of the heat pump system. Measuring the change in delta-T determines the need for defrost. The coil sensor also serves to sense outdoor coil temperature for termination of the defrost cycle.

Fault Detection

A fault condition is indicated by the flashing Fault LED light on the defrost control board located inside the heat pump control box.

In normal operation, the status LED will flash once each second when idle or twice each second with a call for heating or cooling.

PIN Identification

1. TEST_COMMON (Shorting any of the other pins to this pin causes the function of the other pin to be executed. Leaving this pin open results in the normal mode of operation).
2. FRC_DFT = Forced Defrost (Short TEST_COMMON to this pin speeds up all defrost. Remove the short after defrost initiates.

Defrost Control Checkout

Normal operation requires:

a. Status LED on board flashing 1 time/second in standby or 2 times/second with a call for heating or cooling.

b. 24V AC between R & B

c. 24V AC between Y, Y0 & B with unit operating

d. Defrost initiation when FRC_DFT pin is shorted to TEST_COMMON pin.

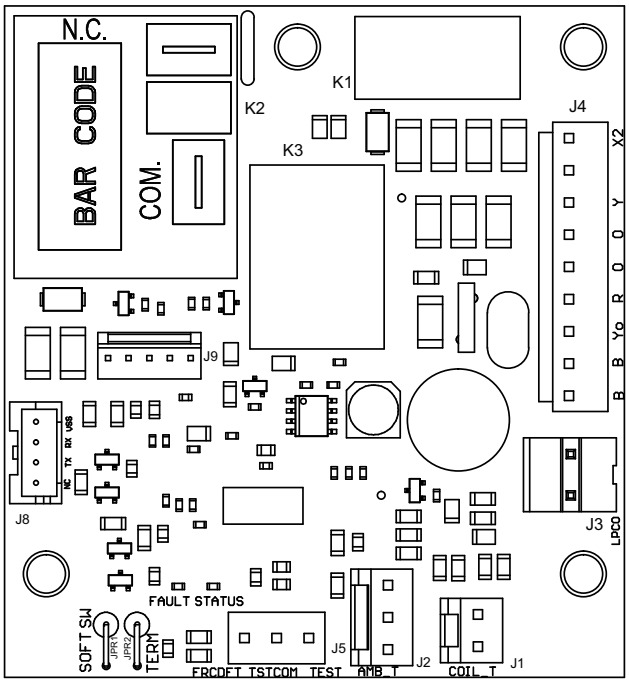

Test Sensors

Measure the temperature the subject sensor is exposed to. If the sensor is mounted on a tube, place the lead on an Annie A-8 (or equiv.) temperature tester on the same tube near the sensor and insulate the bulb.

Unplug the sensor and measure the resistance with a good quality ohmmeter (Simpson 260 or equiv.). Read the value as quickly as possible to prevent the meter current from changing the resistance reading.

Using the chart, locate (as close as possible) the actual sensor temperature. The measured resistance should be relatively close to the resistance value shown in the chart.

Table 1. Defrost Control Thermistor Table

TEMP °F	TEMP °C	THERMISTOR RESISTANCE (OHMS)	Volts DC
-15.00	-26.11	135976	2.50
-10.00	-23.33	115112	2.40
-5.00	-20.56	97745	2.29
0.00	-17.78	83247	2.17
5.00	-15.00	71108	2.05
10.00	-12.22	60916	1.93
15.00	-9.44	52333	1.81
20.00	-6.67	45076	1.69
25.00	-3.89	38927	1.56
30.00	-1.11	33703	1.45
35.00	1.67	29253	1.33
40.00	4.44	25452	1.22
45.00	7.22	22198	1.12
50.00	10.00	19405	1.02
55.00	12.78	17002	0.93
60.00	15.56	14930	0.85
65.00	18.33	13138	0.77
70.00	21.11	11586	0.70
75.00	23.89	10238	0.63
80.00	26.67	9065	0.57
85.00	29.44	8043	0.52
90.00	32.22	7150	0.47
95.00	35.00	6368	0.42
100.00	37.78	5682	0.38
105.00	40.56	5079	0.35
110.00	43.33	4548	0.31
115.00	46.11	4079	0.28
120.00	48.89	3665	0.26
125.00	51.67	3298	0.23
130.00	54.44	2972	0.21
135.00	57.22	2683	0.19

Example:

Sensor temp. = 19°F
Measured Resistance = 46K ohms
This sensor is good since the measured value is relatively close to the chart value.

Table 2. DEMAND DEFROST QUICK SPECS

COMPRESSOR	SCROLL	SCROLL
MNEMONIC NO CNT	CNT08177	CNT08176
GROUP NOMENCLATURE [a]	D161244G01	D161246G02
SUPERSEDURE CNT	07824	07825
OD FAN TYPE – PSC/ECM	PSC	ECM
	1-SPD	1-SPD
DEFROST ENABLED: Y = ON COIL TEMPERATURE	≤52 °F [b]	≤52 °F
DEFROST PERMIT: Y = ON COIL TEMPERATURE	≤32 °F	≤32 °F
MIN DEFROST TIME (MINUTES)	1	1
TARGET DEFROST TIME (MINUTES)	4	4
MAX TIME OVERRIDE (MINUTES +)	15	15
DEFROST TERMINATE COIL TEMPERATURE (Factory Setting)	47°F	47°F
DEFROST HI TERMINATE COIL TEMPERATURE (Cut Jumper 2)	70° F	70°F
SOV SWITCH-OVER DELAY AFTER DEFROST TERM. (SECONDS)	12	12
DEFEAT SWITCH-OVER DELAY (SECONDS) (Cut Jumper 1)	0	0
LOW AMBIENT HEAT PUMP LOCK OUT	-12°F	-12°F
LOW AMBIENT HEAT PUMP RESUME	-3	-3
LPCO INPUT TO CONTROL	YES	YES
LPCO BYPASS IN/OUT DEFROST (MINUTES)	3	3

[a] GROUP suffix for drawing number D
[b] ≤ (EQUAL OR LESS THAN)

Table 3. LED FAULT CODES

LED FAULT CODES	FAULT DESCRIPTION	DEFROST CONTROL BEHAVIOR
1 FLASH	Ambient Temp Sensor is out of range (open/shorted)	Initiate defrost after every 60 minutes of runtime. Defrost will terminate on coil temp. See Note 1 & 2.
2 FLASH	Coil Temp Sensor is out of range (open/shorted)	Initiate a 15 minute forced defrost after every 60 minutes of runtime. See Note 1 & 2.
3 FLASH	Low Pressure Switch is open	3 flash goes away when/if LPCO closes.
4 FLASH	Hard Lock Out (can only be cleared with a low voltage power cycle)	Occurs after 9th trip of LPCO. See Note 6.

Table 3. LED FAULT CODES (continued)

LED FAULT CODES	FAULT DESCRIPTION	DEFROST CONTROL BEHAVIOR
5 FLASH	Soft Lock Out	5 flash goes away after soft lockout period expires. See Note 2.
6 FLASH	Defrost cycles too close together	Heating short cycle fault triggers 6 flash. The system will follow 10 adaptive time heating cycles and then return to demand defrost.
9 FLASH	Low Ambient Soft Lockout. Outdoor temperature dropped below 3°F. (OFF at -12°F/ON at 3°F)	Outdoor temperature is below -12°F. See Note 5.

1. Initiate Adaptive/Timed Limp Mode so long as Coil Temp Sensor is functional. Monitor actual time in defrost and add or reduce run time until next forced defrost based on achieving a 4 minute (+/-1) defrost period.
2. This defrost control utilizes a safety strategy called "Adaptive Limp Mode". Adaptive limp mode is defined as a timed heating mode following rapid defrosts (accumulated heating times between defrost totaling less than 15 minutes). Once invoked the DFC will limit defrost periods and maximize heating capacity. While in adaptive limp mode the DFC will monitor heating and defrost periods for no longer than 10 cycles. The DFC will then release the board to demand defrost; however, if the LPCO trips while in limp mode the system will initiate a soft lockout and exit limp mode.

   If both Coil Temp Sensor and Ambient Temp Sensor have failed, initiate a 5 minute forced defrost every 60 minutes of run time. This in conjunction with the normal low pressure trip, will initiate a soft lockout.

   a. A short heating cycle that enters defrost in 15 minutes or less and/or enters two more defrosts with less than 15 minutes of accumulative run time each will enter an Adaptive Limp Mode (6 Flash).

   b. Coil sensor failure will initiate a Timed Limp Mode. This will be accompanied by a 2 flash. The DFC will initiate defrost after 60 minutes of accumulated heating runtime and terminate after a 5 minute defrost. The limp mode will clear after the sensor fault is cleared.

   c. Ambient sensor failure will initiate an Adaptive Timed Limp Mode. This will be accompanied by a 1 flash. The DFC will initiate defrost after 60 minutes of accumulated heating runtime and force a defrost, which will terminate on coil temp. The limp mode will clear after the sensor fault is cleared.

   d. This could be caused by a condenser fan motor failure, low charge or other reasons.
3. The first 15 minute soft lockout the system will return to normal operation. Should this continue to operate in this manner there will be a 30 minute soft lockout and so on. At the end of the lockout process, if a hard lock is necessary, a 4 flash will be announced and system operation is interrupted. If the ambient temperature climbs above 40°F for more than 30 minutes this clears this fault count and resumes normal operation.

   a. If or when normal operation is restored after the ambient temperature climbs above 40°F for more than 30 minutes and another LP trip is monitored on the 9th trip this will initiate a hard lockout that will not be cleared by temperature or time.
4. Once ambient drops to -12 or lower wait 5 minutes before soft lockout begins. During soft lockout the Y signal passes through to the X2 output. Resume operation when ambient temperature rises to -3°F or higher and after 5 minute soft lockout period expires. LPCO should reset around 5°F.
5. During a Hard Lockout, the X2 relay opens so that the Y signal **does not** pass through.

LPCO	HEATING Mode	Flash Code
1st Trip	15 minute soft lock-out period	5 and 6 flash
2nd Trip	30 minute soft lock-out period	5 and 6 flash
3rd Trip	45 minutes soft lock-out period	5 and 6 flash
4th – 8th Trip	18 hour soft lock-out period	5 and 6 flash
9th Trip [a]	Hard lock-out	4 flash

[a] If LPCO is open, a 3 flash can accommodate any of the faults above and will clear when the LPCO closes.

LPCO	COOLING Mode	Flash Code
1st Trip	15 minute soft lock-out period	5 and 6 flash
2nd Trip	30 minute soft lock-out period	5 and 6 flash
3rd Trip	18 hour soft lock-out period	5 and 6 flash
4th Trip	18 hour soft lock-out period	4 flash

Note: *Once the LPCO closes, the 3 flash fault will not continue showing – only 5 flash if in the soft-lockout period.*

Troubleshooting

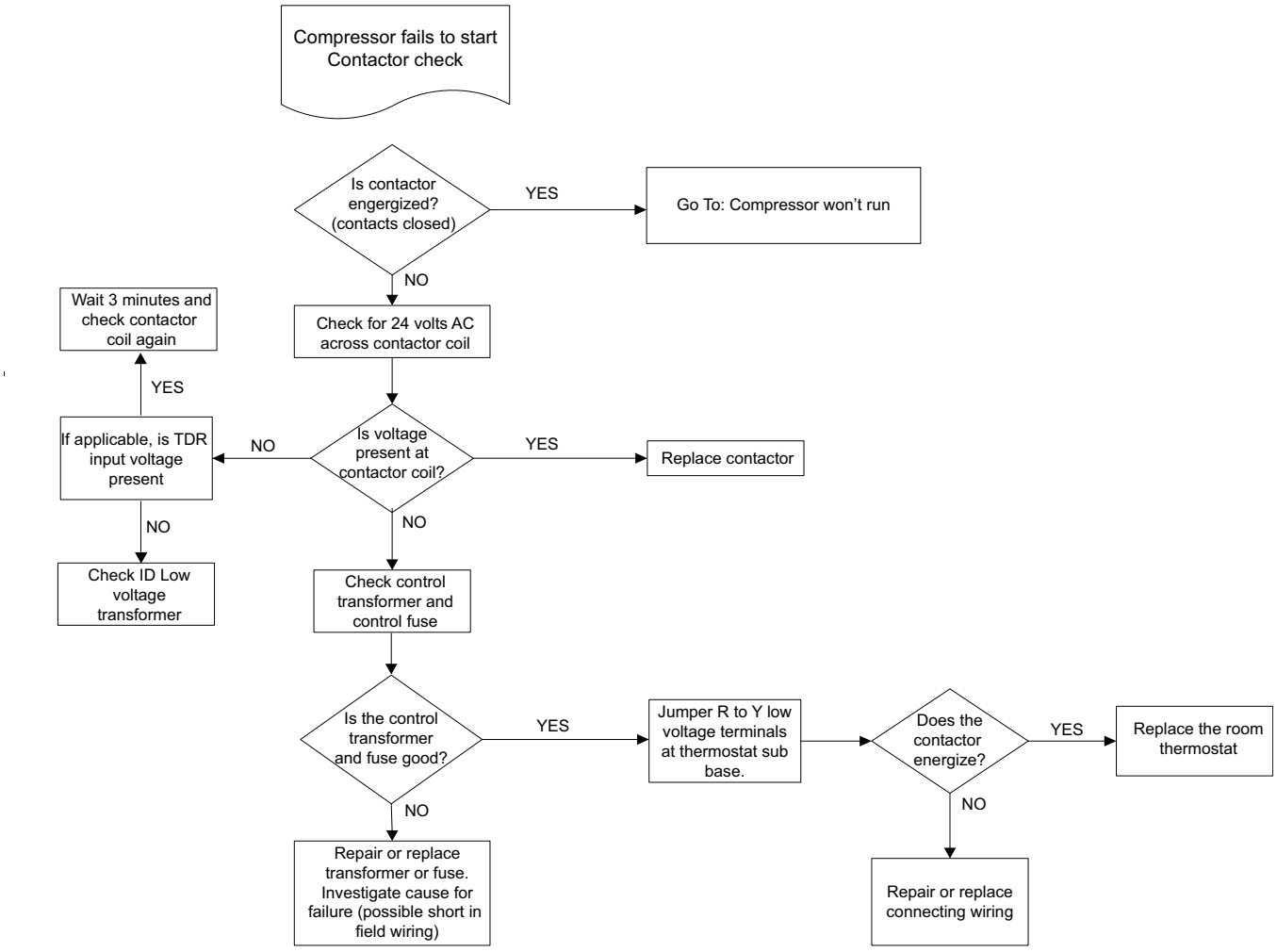

Contactors

Single Pole Contactor (MS)*

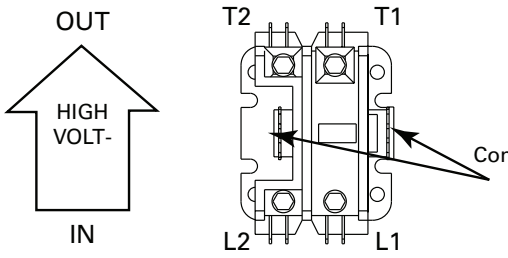

Double Pole Contactor (MS)*

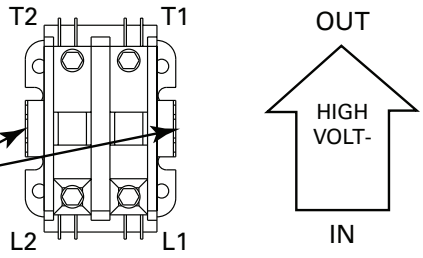

Troubleshooting

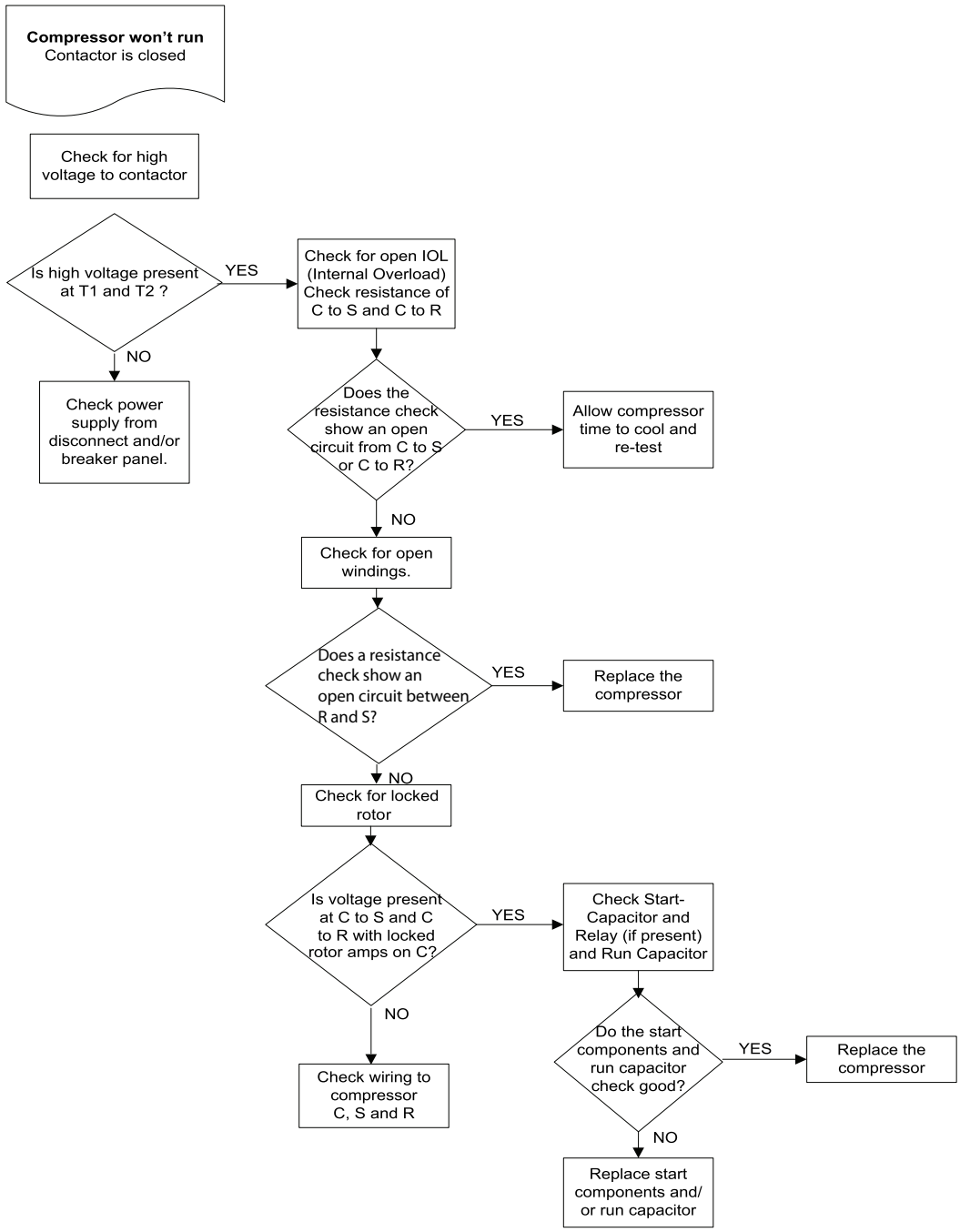

Troubleshooting

Before starting, insure proper fan motor operation and both indoor and outdoor coils are clean and clear of ice.

Troubleshooting Outdoor TXV / Heating Mode

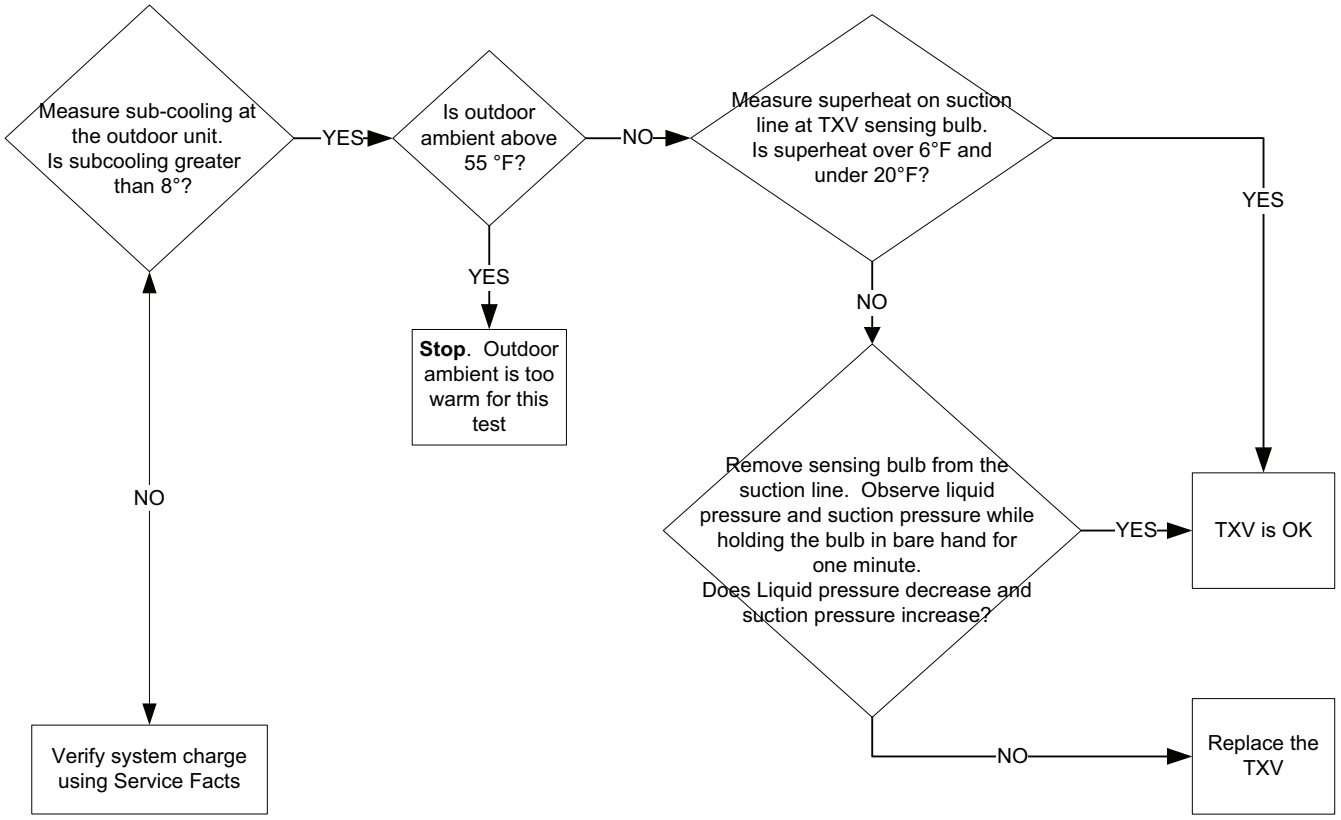

Refrigeration Circuit

Heating Refrigeration Cycle

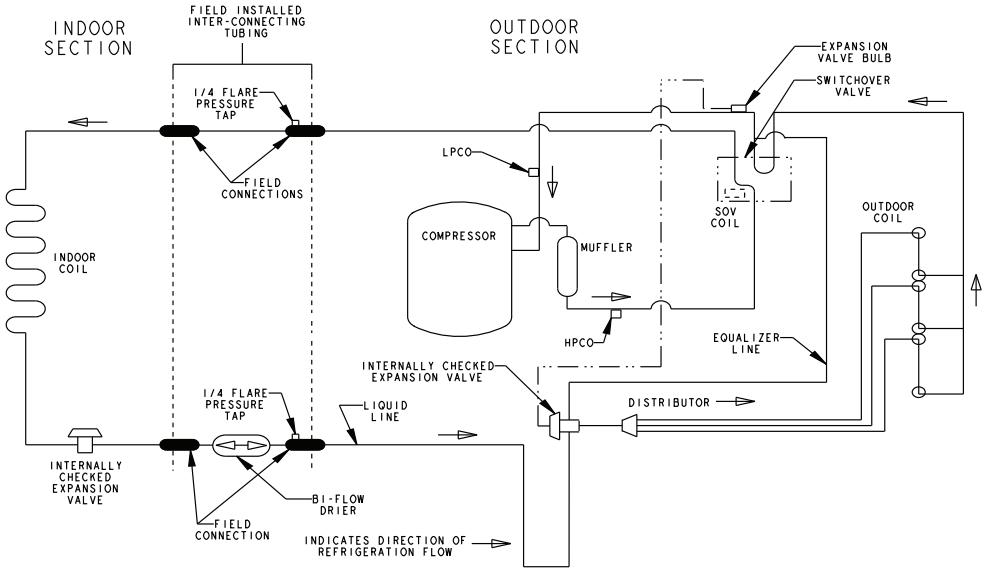

Cooling Refrigeration Cycle

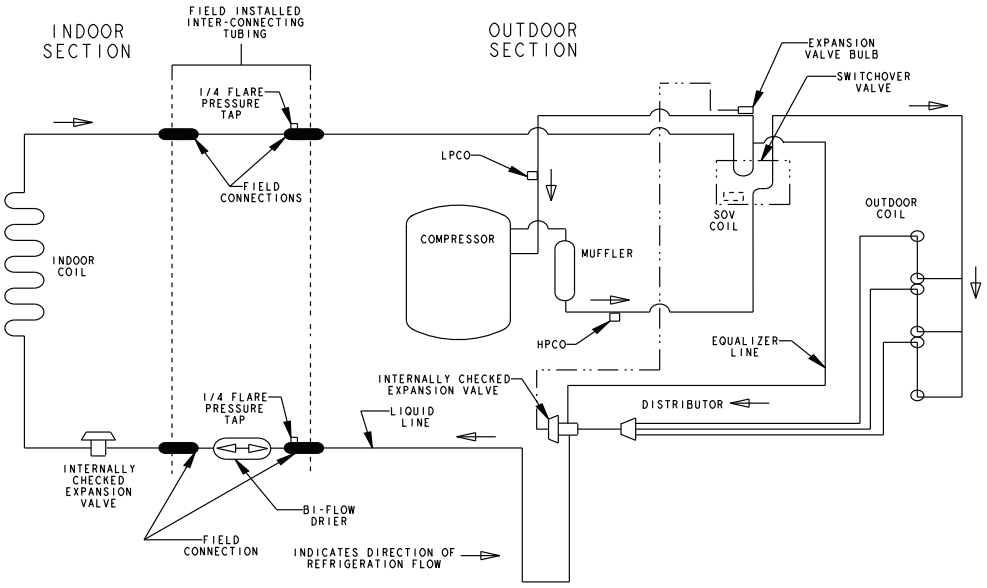

Printed from D159360

Pressure Curves

Figure 3. Pressure Curve for A4HP4018A1

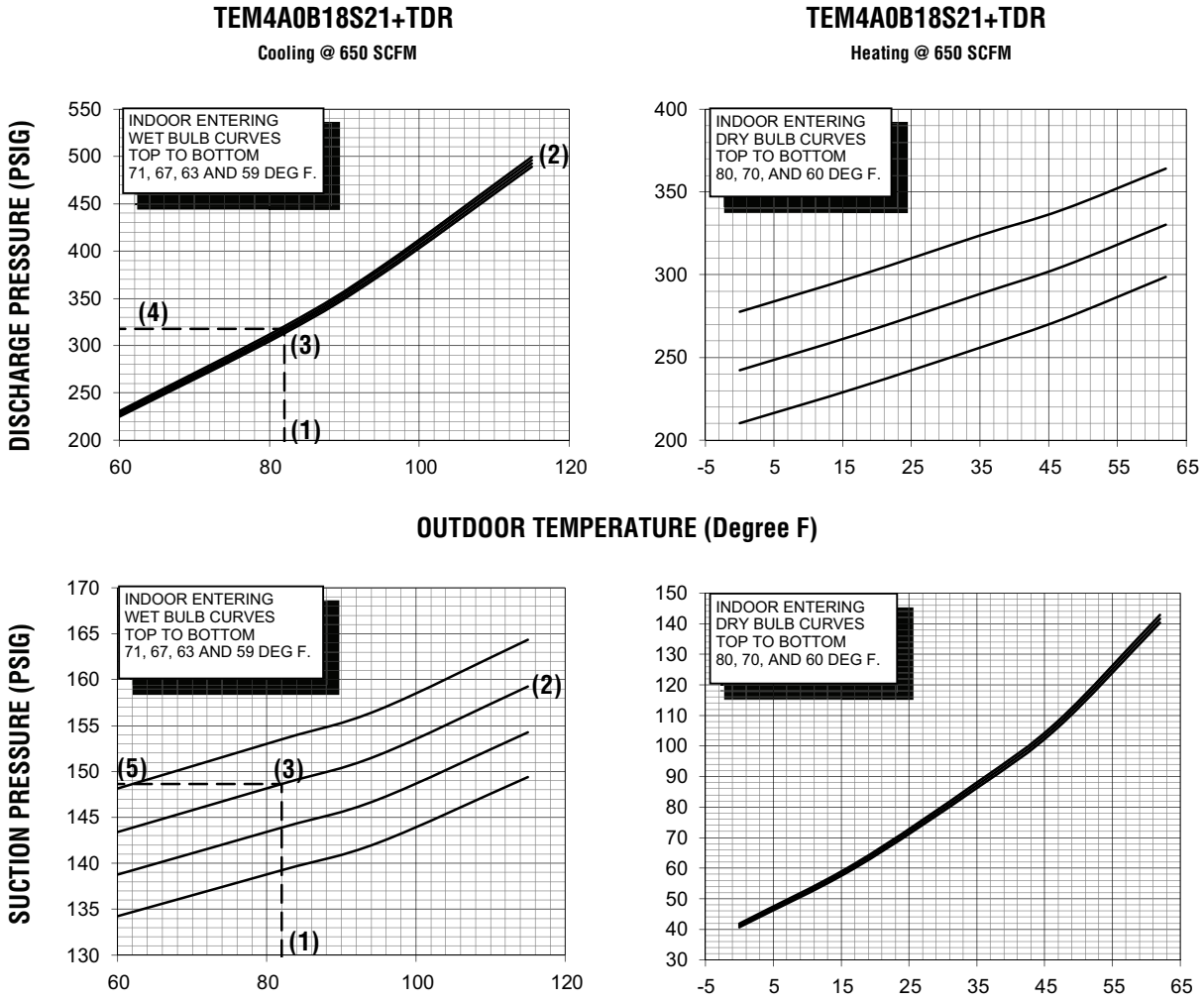

COOLING PERFORMANCE CAN BE CHECKED WHEN THE OUTDOOR TEMP IS ABOVE 65 DEG F.

TO CHECK COOLING PERFORMANCE, SELECT THE PROPER INDOOR CFM, ALLOW PRESSURES TO STABILIZE. MEASURE INDOOR WET BULB TEMPERATURE, OUTDOOR TEMPERATURE, DISCHARGE AND SUCTION PRESSURES. ON THE PLOTS LOCATE OUTDOOR TEMPERATURE (1); LOCATE INDOOR WET BULB (2); FIND INTERSECTION OF OD TEMP. & ID W.B. (3); READ DISCHARGE OR SUCTION PRESSURE IN LEFT COLUMN (4).

EXAMPLE: (1) OUTDOOR TEMP. 82 F.
(2) INDOOR WET BULB 67 F.
(3) AT INTERSECTION
(4) DISCHARGE PRESSURE @ 650 CFM IS 318 PSIG.
(5) SUCTION PRESSURE @ 650 CFM IS 149 PSIG.

ACTUAL:
DISCHARGE PRESSURE SHOULD BE +/- 10 PSI OF CHART
SUCTION PRESSURE SHOULD BE +/- 3 PSIG OF CHART

INTERCONNECTING LINES
GAS - 3/4" O.D.
LIQUID - 3/8" O.D.

DWG.NO. A4HP4018A1

About Trane and American Standard Heating and Air Conditioning

Trane and American Standard create comfortable, energy efficient indoor environments for residential applications. For more information, please visit www.trane.com or www.americanstandardair.com.

The AHRI Certified mark indicates company participation in the AHRI Certification program. For verification of individual certified products, go to ahridirectory.org.

The manufacturer has a policy of continuous data improvement and it reserves the right to change design and specifications without notice. We are committed to using environmentally conscious print practices.

A4HP4018-SF-1B-EN 20 Apr 2020
Supersedes A4HP4018-SF-1A-EN (May 2019)

©2020