Submittal

Single Packaged Heat Pump

4WCA4036A1000A

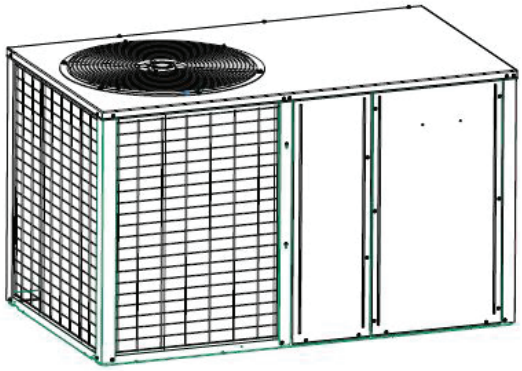

Note: *"Graphics in this document are for representation only. Actual model may differ in appearance."*

TAG:_____

⚠ SAFETY WARNING

Only qualified personnel should install and service the equipment. The installation, starting up, and servicing of heating, ventilating, and air-conditioning equipment can be hazardous and requires specific knowledge and training. Improperly installed, adjusted or altered equipment by an unqualified person could result in death or serious injury. When working on the equipment, observe all precautions in the literature and on the tags, stickers, and labels that are attached to the equipment.

December 2019 **4WCA4036A-SUB-1A-EN** Ingersoll Rand

Product Specifications

MODEL	4WCA4036A1000A
RATED Volts/PH/Hz	208–230/1/60
Performance Cooling BTUH [a]	35000
Indoor Airflow (CFM)	1200
Power Input (KW)	3.08
EER/SEER (BTU/Watt-Hr.) [b]	11.5/14.0
Sound Power Rating [dB(A)] [c]	79.3
PERFORMANCE HEATING	
(High Temp.) BTUH	32600
Power Input (KW)	2.68
(Low Temp.) BTUH	17800
Power Input (KW)	2.30
HSPF (BTUH/Watt-Hr)	8.0
POWER CONN. — V/Ph/Hz	208/230/1/60
Min. Brch. Cir. Ampacity [d]	30
Fuse Size — Max. (amps)	45
Fuse Size — Recmd. (amps)	45
COMPRESSOR	SCROLL
VOLTS/PH/HZ	208/230/1/60
R.L. Amps — L.R. Amps	15.4/84.0
OUTDOOR COIL — TYPE	PLATE FIN
Rows/F.P.I	1/22
Face Area (sq. ft.)	13.2
Tube Size (in.)	5/16
Refrigerant Control	EXPANSION VALVE
INDOOR COIL — TYPE	PLATE FIN
Rows/F.P.I	3/16
Face Area (sq. ft.)	4.56
Tube Size (in.)	5/16
Refrigeration Control	EXPANSION VALVE
Drain Conn. Size (in.)	3/4 MALE NPT
OUTDOOR FAN — TYPE	PROPELLER
DIA. (IN.)	23
DRIVE/NO. SPEEDS	DIRECT / 1
CFM @ 0.0 in. w.g. [e]	3540
Motor — HP/R.P.M	1/5 / 825
Volts/Ph/Hz	200/230 / 1 / 60
F.L. Amps/L.R Amps	1.05/2.51
INDOOR FAN — TYPE	CENTRIFUGAL
Dia. x Width (in.)	11 X 8
Drive/No. Speeds	DIRECT / 3
CFM @ 0.0 in. w.g. [f]	SEE FAN PERFORMANCE TABLE
Motor — HP/R.P.M.	3/4 / VARIABLE
Volts/Ph/Hz	208–230/1/60
F.L. Amps	6.3
FILTER / FURNISHED	NO
Type Recommended	THROWAWAY
Recmd. Face Area (sq. ft) [g]	4.0
REFRIGERANT	R-410A
Charge (lbs.)	4.56
CHARGING SPECIFICATIONS	
Subcooling	12°
DIMENSIONS	H X W X L
Crated (in.)	40 7/8 x 36 3/8 x 61 1/8
WEIGHT	
Shipping (lbs.) / Net (lbs.)	475

[a] Rated in accordance with AHRI Standard 210/240.
[b] Rated in accordance with D.O.E. test procedure.
[c] Sound Power values are not adjusted for AHRI 270–95 tonal corrections.
[d] Calculated in accordance with currently prevailing Nat'l Electrical Code.
[e] Standard Air — Dry Coil — Outdoor.
[f] Standard Air — Dry Coil — Indoor
[g] Filters must be installed in return air stream. Square footages listed are based on 300 f.p.m. face velocity. If permanent filters are used size per manufacturer's recommendation with a clean resistance of 0.05" W.C.

Outline Drawings

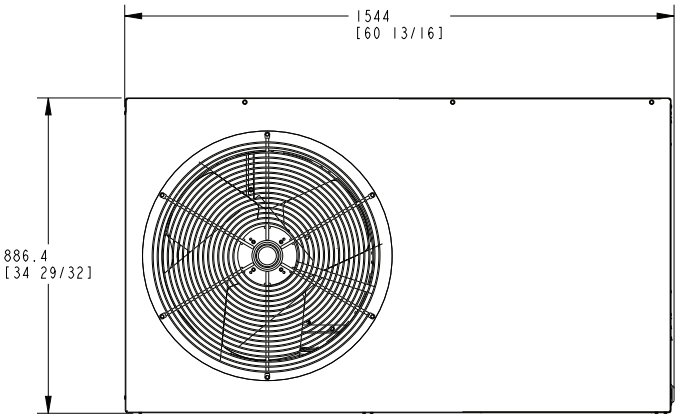

TOP SIDE

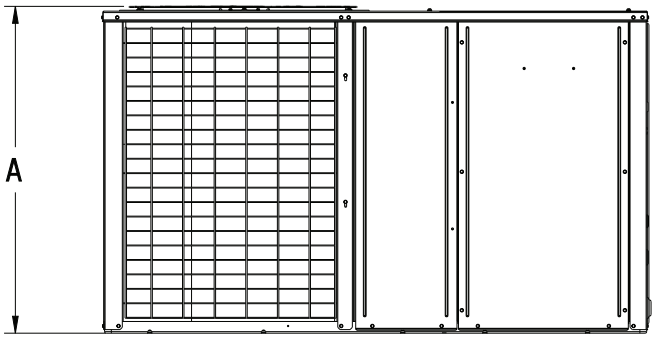

FRONT SIDE

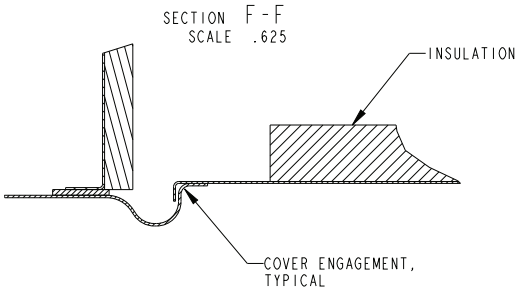

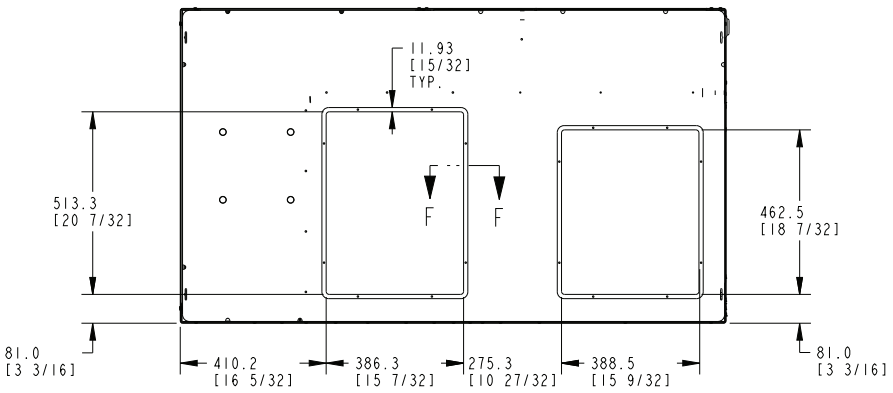

BOTTOM SIDE

Outline Drawings

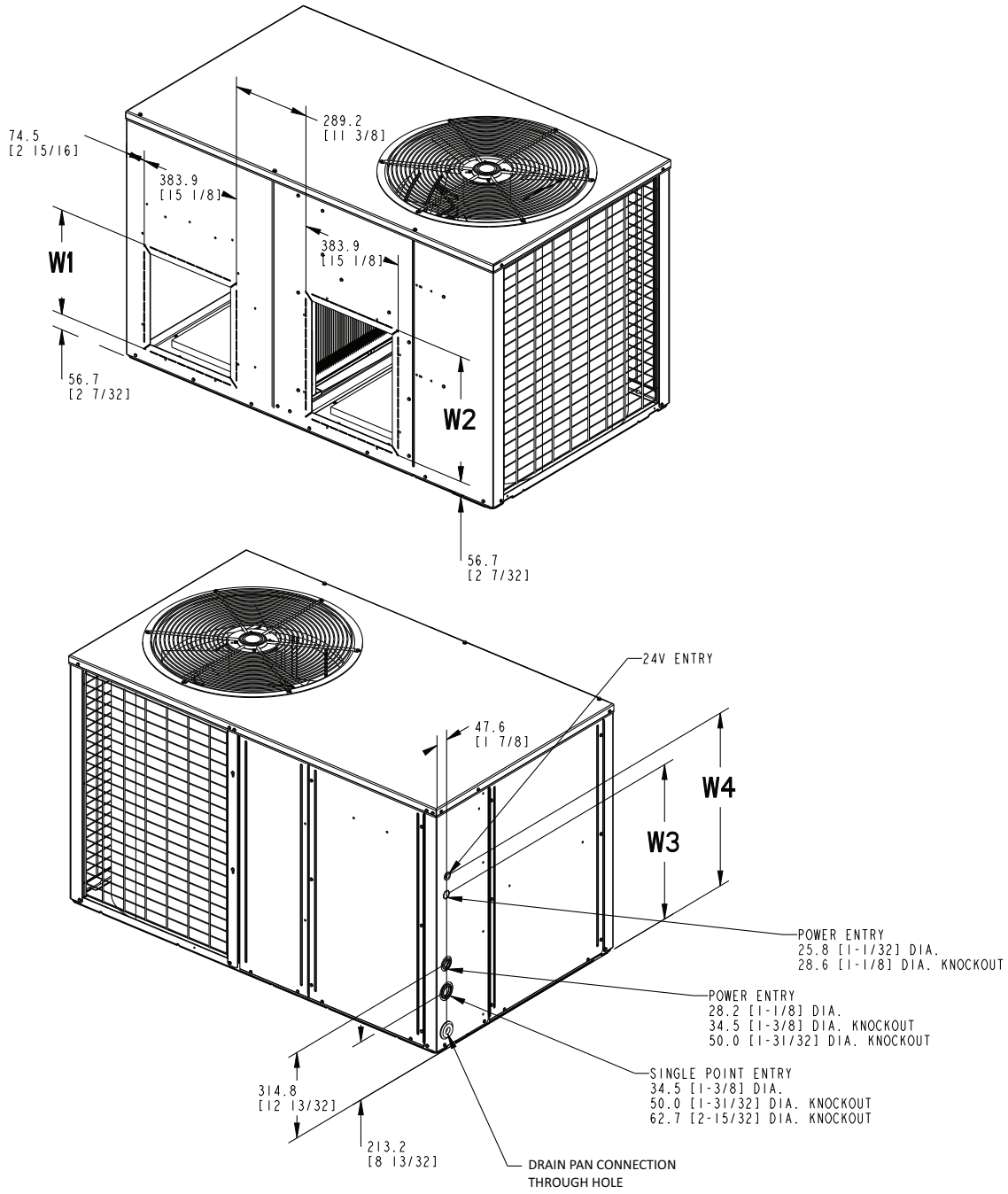

MODEL	HEIGHT MM/IN .					
	A	W1	W2	W3	W4	NET WEIGHT/LBS
4WCA4024A	918.8 [36-5/32]	383.9 [15 1/8]	460.1 [18 1/18]	568.8 [22 13/32]	636.1 [25 1/32]	410
4WCA4030A	918.8 [36-5/32]	383.9 [15 1/8]	460.1 [18 1/18]	568.8 [22 13/32]	636.1 [25 1/32]	410
4WCA4036A	918.8 [36-5/32]	383.9 [15 1/8]	460.1 [18 1/18]	568.8 [22 13/32]	636.1 [25 1/32]	430
4WCA4042A	918.8 [36-5/32]	383.9 [15 1/8]	460.1 [18 1/18]	568.8 [22 13/32]	636.1 [25 1/32]	440
4WCA4048A	1045.8 [41-5/32]	460.1 [18 1/8]	510.9 [20 1/8]	645.0 [25 13/32]	712.3 [28 1/32]	460
4WCA4060A	1045.8 [41-5/32]	460.1 [18 1/8]	510.9 [20 1/8]	645.0 [25 13/32]	712.3 [28 1/32]	460

Indoor Fan Performance (230v)

Table 1. Heater Table

Heater	Minimum Heater Airflow CFM
	4WCA4036A1000A
BAYHTR1V05LUGAA	1000
BAYHTR1H08LUGAA	1000
BAYHTR1H10LUGAA	1100
BAYHTR1H15BRKAA	1400

Table 2. Airflow Table

4WCA4036A	ESP	0.1	0.2	0.3	0.4	0.5	0.6	0.7	0.8	0.9	1
Low	CFM	1369	1278	1178	1078	977					
	WATTS	202	210	220	230	242					
Medium	CFM					1404	1285	1182	1078	1016	953
	WATTS					401	413	428	443	455	467
High	CFM									1392	1284
	WATTS									686	708

Full Perimeter Roof Mounting Curb

Figure 1. 2.0 — 5.0 Ton Models

BAYCURB060A Full Perimeter Roof Mounting Curb

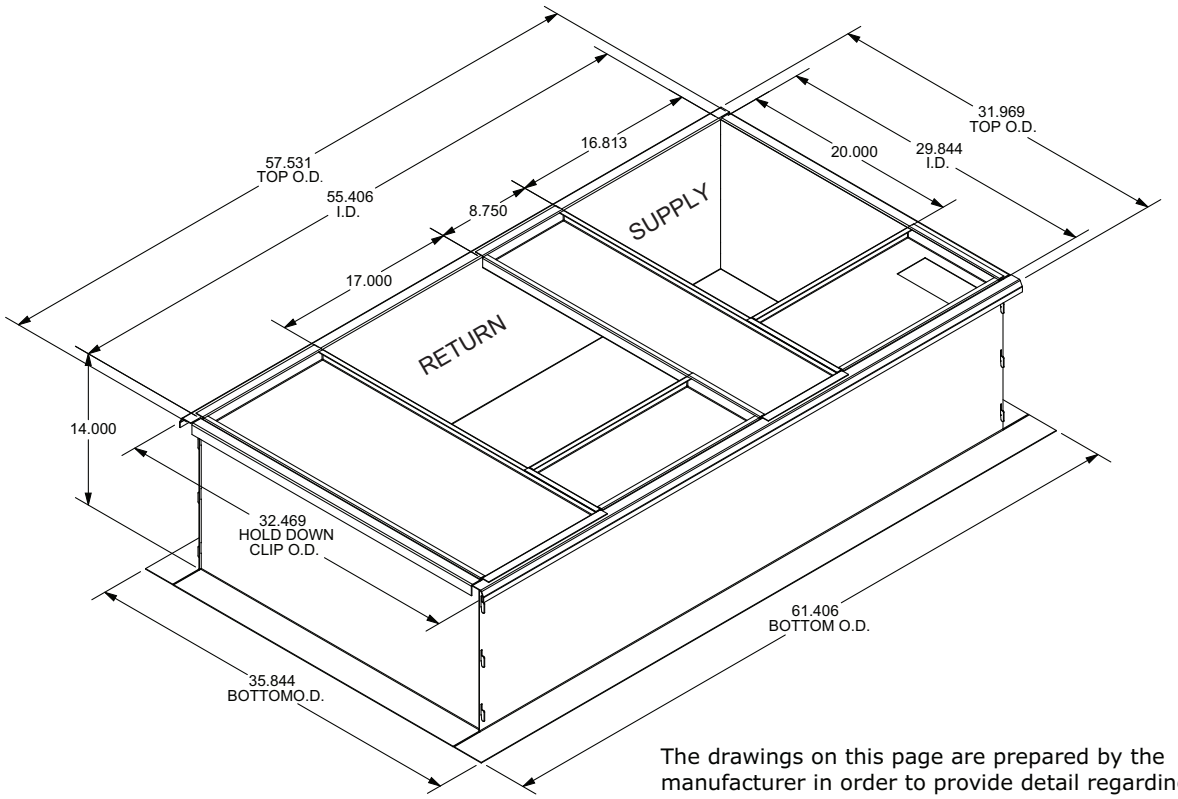

The drawings on this page are prepared by the manufacturer in order to provide detail regarding job layout only. These drawings are not intended to be used as a basis to construct, build or modify the items depicted in the drawings. The manufacturer is not responsible for the unauthorized use of these drawings and expressly disclaims any liability for damages resulting from such unauthorized use.

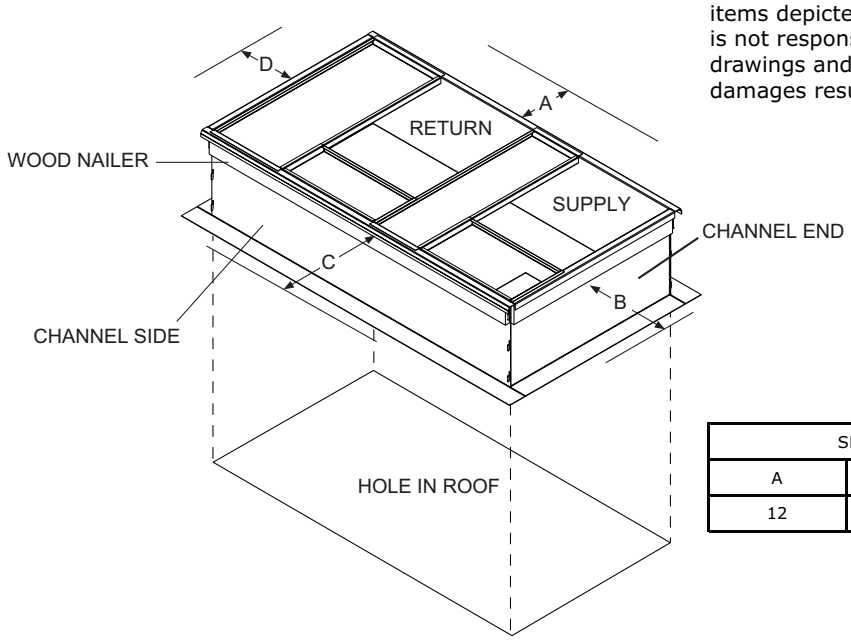

SERVICE CLEARANCE DIMENSIONS			
A	B	C	D
12	42	42	36

Supplementary Electric Heaters

Table 3. BAYHTR1V - Supplementary Electric Heaters

UNIT MODEL	ELECTRIC HEATER MODEL	RATED VOLT-AGE	PHASE	AMPS	HEATER CAPACITY		NO. OF STAGES	KW/STAGE		MCA	MAX. OVER CURRENT PROTEC-TION DEVICE
					KW	BTUH		1	2		
4WCA4036A1000A	BAYHTR1V05LUGAA	208/240	1	17/ 20	3.6/ 4.8	12300/ 16400	1	3.6/ 4.8	—	22/ 25	25/ 25
	BAYHTR1H08LUGAA	208/240	1	28/ 32	5.76/ 7.68	19700/ 26200	1	5.76/ 7.68	—	35/ 40	35/ 40
	BAYHTR1H10LUGAA	208/240	1	35/ 40	7.2/ 9.6	24600/ 32800	1	7.2/ 9.6	—	43/ 50	45/ 50
4WCA4036A1000A	BAYHTR1H15BRKAA	208/240	1	52/ 60	10.8/ 14.4	36900/ 49100	2	7.2/ 9.6	3.6/ 4.8	65/ 75	70/ 80

1. Any power supply and circuits must be wired and protected in accordance with local electrical codes.
2. The values listed in the above table are for the electric heater only.
3. Field wiring must be rated at least 75° C.
4. * indicates an alpha character

ALL VALUES ARE FOR THE ELECTRIC HEATER ONLY

Table 4. BAYSPEK - Single Power Entry Kit

SINGLE CIRCUIT POWER AMPACITY AND OVER CURRENT PROTECTION				
UNIT MODEL	SINGLE POWER ENTRY KIT	HEATER MODEL	MIN CKT AMP	MAX OVER-CURRENT DEVICE
4WCA4036A	BAYSPEK070A	BAYHTR1H08	70	80
		BAYHTR1H10	80	80
	BAYSPEK071A	BAYHTR1H15	105	110
	BAYSPEK072A	BAYHTR1V05	55	60

Mechanical Specifications

General

The units shall be horizontal airflow as shipped and convertible to downflow. All units shall be factory assembled, piped, internally wired and fully charged with refrigerant. Units shall be certified to UL Standard 1995. All units shall be factory run tested to check cooling operation, fan and blower rotation and control or TXV sequence. Units shall be designed to operate at ambient temperatures between 115°F and 55°F in cooling as manufactured. Cooling performance shall be rated in accordance with AHRI standards.

Unit Casing

All components shall be mounted in a weather-resistant steel cabinet with an enamel finish. Access panels shall be provided for unit controls and indoor coil and fans. Indoor air section compartment shall be completely insulated with fireproof, permanent, odorless fiber material. Knockouts shall be provided for utility and control connections. Drain connections shall be provided to accommodate indoor water runoff.

Compressor (2 and 2 1/2 Ton Models)

The compressor shall be hermetically sealed, high efficiency rotary compressors. Internal overcurrent and over temperature protection, internal pressure relief shall be standard. Other features include centrifugal oil pump, low vibration and noise.

Compressor (3–5 Ton Models)

The compressor shall be hermetically sealed, high efficiency scroll compressors. Internal overcurrent and over temperature protection, internal pressure relief shall be standard. Other features include centrifugal oil pump, low vibration and noise.

Refrigeration System

All units shall have refrigerant control. Service pressure tap ports and a refrigerant line filter shall be standard.

Evaporator Coil Internally enhanced 3/8" OD seamless copper tubing mechanically bonded to aluminum fins, factory pressure and leak tested at 480 – 650 psig. All units have TXV to control refrigerant flow.

Condenser Coil

All aluminum micro channel, extruded tubes, mechanically bonded to aluminum fins, and factory pressure and leak tested at 480 – 650 psig.

Indoor Air Fan

Constant Torgue, forward-curved, centrifugal wheel in a Metallic Blower housing. Motor shall have thermal overload protection and permanently lubricated motor bearings. Motor/blower assembly isolated from unit with rubber mounts.

Outdoor Fan

One direct-drive, statically and dynamically balanced propeller fan shall be used in a draw-through vertical discharge configuration. Permanently lubricated weather proof motor shall have built-in thermal overload protection.

System Controls

System controls include condenser fan, evaporator fan and compressor contactors.

Accessories Roof Curb

The roof curb shall be designed to mate with the unit and provide support and complete weathertight installation when properly installed. Adhesive back polyurethane sealing strips shall be provided to ensure an airtight seal between supply and return openings of the curb and unit. The roof curb design allows field fabricated ductwork to be connected directly to the curb. Curb ships knocked down for field assembly, and includes factory installed wood nailer strips.

Electric Heaters

Each heater assembly shall include power supply fusing if over 48 amps, automatic resetting limit switches and heat limiters for thermal protection. Heaters shall be provided with polarized plugs for quick connection to unit low voltage wiring. Electric heat modules shall be UL listed.

Single Source Power Entry

This accessory when used with electric heat accessory shall allow single source power connection to unit and heater combination. Single source power entry kits shall have specific matching heater(s). Kit shall include high voltage terminal blocks, fuse blocks and fuses, cut-to-length interconnecting wiring, and junction box (if required) to provide power sources with fuse protection as required for both the unit and accessory heater. Kit components shall install within the heater cabinet in the heater access section. Single source branch power circuit shall be protected and wired in accordance with local codes.

Start Kit

Extra compressor starting capacity for single phase equipment.

Control Options
Standard Indoor Thermostats

Two stage heating/cooling or one stage heating/cooling thermostats shall be available in either manual or automatic changeover.

Programmable Electronic Night Setting Thermostat

Programmable electronic thermostat shall provide heating setback and cooling setup with 7–day programming capability. 1H/1C or 2H/2C models available.

Ingersoll Rand (NYSE: IR) advances the quality of life by creating comfortable, sustainable and efficient environments. Our people and our family of brands — including Club Car®, Ingersoll Rand®, Thermo King® and Trane® — work together to enhance the quality and comfort of air in homes and buildings; transport and protect food and perishables; and increase industrial productivity and efficiency. We are a global business committed to a world of sustainable progress and enduring results.

ingersollrand.com

AHRI CERTIFIED®
www.ahridirectory.org
Unitary Small HP
AHRI Standard 210/240
Certification applies only when the complete system is listed with AHRI.

c UL us LISTED

The AHRI Certified mark indicates Ingersoll Rand participation in the AHRI Certification program. For verification of individual certified products, go to www.ahridirectory.org.

Ingersoll Rand has a policy of continuous product and product data improvements and reserves the right to change design and specifications without notice.
We are committed to using environmentally conscious print practices.

4WCA4036A-SUB-1A-EN 16 Dec 2019
Supersedes (New)

©2019 Ingersoll Rand