Product Data

Convertible Air Handlers
2 to 5 Tons

A5AHC002A1B30A
A5AHC003A1B30A
A5AHC004A1B30A
A5AHC004A1D30A
A5AHC005A1D30A
A5AHC006A1D30A
A5AHC007A1D30A

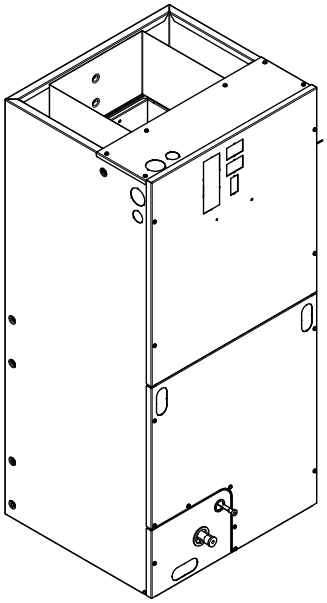

Note: *Graphics in this document are for representation only. Actual model may differ in appearance.*

November 2025

AHR-PSD008B-EN

Introduction

The A5AHC series air handler is designed for installation in a closet, utility room, alcove, basement, crawlspace or attic. These versatile units are applicable to air conditioning and heat pump applications. Several models are available to meet the specific requirements of the outdoor equipment. Field installed electric resistance heaters are available.

Copyright

This document and the information in it are the property of Trane, and may not be used or reproduced in whole or in part without written permission. Trane reserves the right to revise this publication at any time, and to make changes to its content without obligation to notify any person of such revision or change.

Trademark

All trademarks referenced in this document are the trademarks of their respective owners.

Revision History

- Updated model numbers across the document.
- Updated table note (a) in the Product Specification chapter.
- Corrected words Painted and TEM.
- Updated dimensional data tables.

Table of Contents

Features and Benefits 4
- Optional Equipment 4

Product Specifications 5

Heater Pressure Drop Table 7

Minimum Airflow CFM 8

Performance and Electrical Data 9
- Airflow Performance Data 9
- Electrical Data 11

Wiring Diagram 14

Field Wiring Diagrams 15
- External Switches and Accessories 17

Unit Convertibility 18

Dimensional Data 19

Features and Benefits

- Galvanized metal cabinet with captured foil face insulation
- 2% or less air leakage
- R-4.2 Insulating Value
- Multi-Position UP/Down Flow, Horizontal Left /Right
- ALL Aluminum Coil
- Electric Heaters with polarized plug connections (sold as accessory)
- R-454B Thermal Expansion Valve
- ECM Motor
- Low Voltage Pigtail Connections
- Draw Through Design
- Horizontal Drain pan
- Fused 24v Power
- 5 Year Warranty
- Optional extended warranty available

Important: *Condensate management kit is required for all 5 ton air handler models installed in downflow applications.*

Optional Equipment

Table 1. Optional equipment

Accessory Number	Description	Fits Cabinet Size (in.)
BAYHTR1504BRK	Electric Heater, 4KW, Breaker, 24v Control, 1 Ph	18.5 and 23.5
BAYHTR1504LUG	Electric Heater, 4KW, Lug, 24v Control, 1 Ph	18.5 and 23.5
BAYHTR1505BRK	Electric Heater, 5KW, Breaker, 24v Control, 1 Ph	18.5 and 23.5
BAYHTR1505LUG	Electric Heater, 5KW, Lug, 24v Control, 1 Ph	18.5 and 23.5
BAYHTR1508BRK	Electric Heater, 8KW, Breaker, 24v Control, 1 Ph	18.5 and 23.5
BAYHTR1508LUG	Electric Heater, 8KW, Lug, 24v Control, 1 Ph	18.5 and 23.5
BAYHTR1510BRK	Electric Heater, 10KW, Breaker, 24v Control, 1 Ph	18.5 and 23.5
BAYHTR1510LUG	Electric Heater, 10KW, Lug, 24v Control, 1 Ph	18.5 and 23.5
BAYHTR3510LUG	Electric Heater, 10KW, Lug, 24v Control, 3 Ph	18.5 and 23.5
BAYHTR1517BRK	Electric Heater, 15KW, Breaker, 24v Control, 1 Ph	18.5 and 23.5
BAYHTR3517LUG	Electric Heater, 15KW, Lug, 24v Control, 3 Ph	18.5 and 23.5
BAYHTR1523BRK	Electric Heater, 20KW, Breaker, 24v Control, 1 Ph	23.5
BAYHTR1525BRK	Electric Heater, 25KW, Breaker, 24v Control, 1 Ph	23.5
BAYTEMDFKT1A	Downflow Condensate Management Kit	18.5 and 23.5
BAYTEMSPFG1A	Supply Duct Flange Kit	18.5 and 23.5
BAYSPEKT201A	Single Point Power Entry Kit	18.5 and 23.5
TAYBASE185	Air Handler Downflow Sub-Bases	18.5
TAYBASE235 (TAYBASE 100)	Air Handler Downflow Sub-Bases	23.5
BAYSF1185AAA	Slim Fit Filter Box	18.5
BAYSF1235AAA	Slim Fit Filter Box	23.5
TEMBRKSEALT01A	Breaker Seal Kit for sure with BAYHTR15 4kW — 20kW Heaters	18.5 and 23.5
TEMBRKSEALT25A	Breaker Seal Kit for use with 25 kW electric heaters & heater kits used with BAYSPEKT201	18.5 and 23.5

Product Specifications

Table 2. Models — A5AHC002A1B30A, A5AHC003A1B30A, A5AHC004A1B30A, and A5AHC004A1D30A

Model	A5AHC002A1B30A	A5AHC003A1B30A	A5AHC004A1B30A	A5AHC004A1D30A
Family	A5AHC	A5AHC	A5AHC	A5AHC
Brand	RunTru, Ameristar	RunTru, Ameristar	RunTru, Ameristar	RunTru, Ameristar
Family Description	R-454B Convertible Air Handler	R-454B Convertible Air Handler	R-454B Convertible Air Handler	R-454B Convertible Air Handler
Application Configuration	4-Way	4-Way	4-Way	4-Way
Rated Capacity Range (BTUH)	18K - 24K	18K - 30K	24K - 36K	24K - 42K
System Control Type	24V	24V	24V	24V
Power Conn. - V/Ph/Hz	208-230/1/60	208-230/1/60	208-230/1/60	208-230/1/60
Max Breaker Size, Without Electric Heater (Amps)	15	15	15	15
Max Breaker Size, With Electric Heater (Amps)[a]	60	60	60	60
Coil Type	All-Aluminum Plate Fin	All-Aluminum Plate Fin	All-Aluminum Plate Fin	All-Aluminum Plate Fin
Refrigerant Type	R-454B	R-454B	R-454B	R-454B
Refrigerant Control	TXV	TXV	TXV	TXV
Refrigerant Line Connection - Gas (in.)	3/4	3/4	7/8	7/8
Refrigerant Line Connection - Liquid (in.)	3/8	3/8	3/8	3/8
Blower Type	Direct Drive Centrifugal	Direct Drive Centrifugal	Direct Drive Centrifugal	Direct Drive Centrifugal
Configuration	Blow Through	Blow Through	Blow Through	Blow Through
Dimensions (Diameter x Width (in.))	11 x 8	11 x 8	11 x 8	11 x 8
Motor Type	Constant Torque	Constant Torque	Constant Torque	Constant Torque
Nominal CFM[b]	600	800	1200	1200
Speed (RPM)	1050	1050	1050	1050
Volts/Ph/Hz	208-230/1/60	208-230/1/60	208-230/1/60	208-230/1/60
Full Load Amps	2.6	3.9	3.9	3.9
Filter Rack (Yes, No)	No	No	No	No
Dimensions (Length x Width (in.))	—	—	—	—
Duct Connections	L x W	L x W	L x W	L x W
Supply (in.)	12.15 x 16.50	12.15 x 16.50	12.15 x 16.50	12.15 x 21.50
Return (in.)	18.75 x 16.75	18.75 x 16.75	18.75 x 16.75	18.75 x 21.75
Drain Conn. Size (in.)	3/4 NPT	3/4 NPT	3/4 NPT	3/4 NPT
Dimensions	H x W x D	H x W x D	H x W x D	H x W x D
Uncrated (in.)	45-1/8 x 18-1/2 x 21-1/8	46-3/4 x 18-1/2 x 21-1/8	51-3/4 x 18-1/2 x 21-1/8	51-3/8 x 23-1/2 x 21-1/8
Crated (in.)	46-1/2 x 22-1/2 x 25-1/2	48-1/4 x 22-1/2 x 25-1/2	53-1/4 x 22-1/2 x 25-1/2	52-3/4 x 27-1/2 x 25-1/2
Weight - Shipping/Net (lbs.)	116/110	126/117	138/132	145/138

[a] Maximum overcurrent protection is dependent on which electric heater is installed. See Electrical Data, p. 11.
[b] For CFM versus external static pressure (in. w.c.), refer to Airflow Performance Data, p. 9.

Table 3. Models — A5AHC005A1D30A, A5AHC006A1D30A, and A5AHC007A1D30A

Model	A5AHC005A1D30A	A5AHC006A1D30A	A5AHC007A1D30A
Family	A5AHC	A5AHC	A5AHC
Brand	RunTru, Ameristar	RunTru, Ameristar	RunTru, Ameristar
Family Description	R-454B Convertible Air Handler	R-454B Convertible Air Handler	R-454B Convertible Air Handler
Application Configuration	4-Way	4-Way	4-Way
Rated Capacity Range (BTUH)	36K - 48K	36K - 48K	42K - 60K
System Control Type	24V	24V	24V
Power Conn. - V/Ph/Hz	208-230/1/60	208-230/1/60	208-230/1/60
Max Breaker Size, Without Electric Heater (Amps)	15	15	15
Max Breaker Size, With Electric Heater (Amps) [a]	60	60	60
Coil Type	All-Aluminum Plate Fin	All-Aluminum Plate Fin	All-Aluminum Plate Fin
Refrigerant Type	R-454B	R-454B	R-454B
Refrigerant Control	TXV	TXV	TXV
Refrigerant Line Connection - Gas (in.)	7/8	7/8	7/8
Refrigerant Line Connection - Liquid (in.)	3/8	3/8	3/8
Blower Type	Direct Drive Centrifugal	Direct Drive Centrifugal	Direct Drive Centrifugal
Configuration	Blow Through	Blow Through	Blow Through
Dimensions (Diameter x Width (in.))	11 x 8	11 x 8	11 x 8
Motor Type	Constant Torque	Constant Torque	Constant Torque
Nominal CFM[b]	1400	1600	2000
Speed (RPM)	1050	1050	1050
Volts/Ph/Hz	208-230/1/60	208-230/1/60	208-230/1/60
Full Load Amps	3.9	6.0	6.0
Filter Rack (Yes, No)	No	No	No
Dimensions (Length x Width (in.))	—	—	—
Duct Connections	L x W	L x W	L x W
Supply (in.)	12.15 x 21.50	12.15 x 21.50	12.15 x 21.50
Return (in.)	18.75 x 21.75	18.75 x 21.75	18.75 x 21.75
Drain Conn. Size (in.)	3/4 NPT	3/4 NPT	3/4 NPT
Dimensions	H x W x D	H x W x D	H x W x D
Uncrated (in.)	51-3/8 x 23-1/2 x 21-1/8	51-3/8 x 23-1/2 x 21-1/8	57-3/8 x 23-1/2 x 21-1/8
Crated (in.)	52-3/4 x 27-1/2 x 25-1/2	52-3/4 x 27-1/2 x 25-1/2	58-1/8 x 25-7/8 x 25-1/2
Weight - Shipping/Net (lbs.)	145/138	155/144	185/174

[a] Maximum overcurrent protection is dependent on which electric heater is installed. See Electrical Data, p. 11.
[b] For CFM versus external static pressure (in. w.c.), refer to Airflow Performance Data, p. 9.

Heater Pressure Drop Table

Table 4. Heater pressure drop

Airflow CFM	Number of Racks					Heater Racks	
	1	2	3	4		Heater Model	No. of Racks
	Air Pressure Drop — Inches W.G.						
1800	0.02	0.04	0.06	0.14		BAYHTR1504	1
1700	0.02	0.04	0.06	0.14		BAYHTR1505	1
1600	0.02	0.04	0.06	0.13		BAYHTR1508	2
1500	0.02	0.04	0.06	0.12		BAYHTR1510	2
1400	0.02	0.04	0.06	0.12		BAYHTR1517	3
1300	0.02	0.04	0.05	0.11		BAYHTR3510	3
1200	0.01	0.04	0.05	0.10		BAYHTR3517	3
1100	0.01	0.03	0.05	0.09		BAYHTR1523	4
1000	0.01	0.03	0.04	0.09		BAYHTR1525	4
900	0.01	0.03	0.04	0.08		—	—
800	0.01	0.03	—	—		—	—
700	0.01	0.02	—	—		—	—
600	0.01	0.02	—	—		—	—

Minimum Airflow CFM

Table 5. Model — A5AHC002A1B30A

Heater	Minimum Heat Speed Tap	
	With Heat Pump	Without Heat Pump
BAYHTR1504BRK, BAYHTR1504LUG, BAYHTR1505BRK, BAYHTR1505LUG	Tap 2	Tap 2
BAYHTR1508BRK, BAYHTR1508LUG, BAYHTR1510BRK, BAYHTR1510LUG, BAYHTR3510LUG	Tap 5	Tap 5

Table 6. Model — A5AHC003A1B30A

Heater	Minimum Heat Speed Tap	
	With Heat Pump	Without Heat Pump
BAYHTR1504BRK, BAYHTR1504LUG, BAYHTR1505BRK, BAYHTR1505LUG	Tap 3	Tap 3
BAYHTR1508BRK, BAYHTR1508LUG, BAYHTR1510BRK, BAYHTR1510LUG	Tap 4	Tap 3
BAYHTR1517BRK, BAYHTR3517LUG, BAYHTR3510LUG	Tap 5	Tap 3

Table 7. Model — A5AHC004A1B30A and A5AHC004A1D30A

Heater	Minimum Heat Speed Tap	
	With Heat Pump	Without Heat Pump
BAYHTR1504BRK, BAYHTR1504LUG, BAYHTR1505BRK, BAYHTR1505LUG	Tap 2	Tap 2
BAYHTR1508BRK, BAYHTR1508LUG, BAYHTR1510BRK, BAYHTR1510LUG	Tap 5	Tap 3
BAYHTR1523BRK	Tap 5	Tap 3
BAYHTR1517BRK, BAYHTR3517LUG, BAYHTR3510LUG	Tap 5	Tap 3

Table 8. Models — A5AHC005A1D30A

Heater	Minimum Heat Speed Tap	
	With Heat Pump	Without Heat Pump
BAYHTR1504BRK, BAYHTR1504LUG, BAYHTR1505BRK, BAYHTR1505LUG	Tap 2	Tap 2
BAYHTR1508BRK, BAYHTR1508LUG, BAYHTR1510BRK, BAYHTR1510LUG	Tap 4	Tap 4
BAYHTR1523BRK	Tap 4	Tap 3
BAYHTR1517BRK, BAYHTR3517LUG, BAYHTR3510LUG	Tap 5	Tap 3

Table 9. Model — A5AHC006A1D30A

Heater	Minimum Heat Speed Tap	
	With Heat Pump	Without Heat Pump
BAYHTR1504BRK, BAYHTR1504LUG, BAYHTR1505BRK, BAYHTR1505LUG, BAYHTR1508BRK, BAYHTR1508LUG, BAYHTR1510BRK, BAYHTR1510LUG, BAYHTR3510LUG	Tap 2	Tap 2
BAYHTR1517BRK, BAYHTR3517LUG	Tap 4	Tap 4
BAYHTR1523BRK, BAYHTR1525BRK	Tap 5	Tap 4

Table 10. Model — A5AHC007A1D30A

Heater	Minimum Heat Speed Tap	
	With Heat Pump	Without Heat Pump
BAYHTR1504BRK, BAYHTR1504LUG, BAYHTR1505BRK, BAYHTR1505LUG, BAYHTR1508BRK, BAYHTR1508LUG, BAYHTR1510BRK, BAYHTR1510LUG, BAYHTR3510LUG	Tap 2	Tap 2
BAYHTR1517BRK, BAYHTR3517LUG	Tap 3	Tap 3
BAYHTR1523BRK, BAYHTR1525BRK	Tap 5	Tap 3

Performance and Electrical Data

Airflow Performance Data

Table 11. Model – A5AHC002A1B30A

External Static (in w.g)	Airflow			
	Speed Taps: 208-230 Volts			
	Tap 2	Tap 3[a]	Tap 4	Tap 5
0.1	874	978	1045	1134
0.2	824	934	1002	1096
0.3	746	881	955	1056
0.4	676	813	891	1009
0.5	606	746	828	943
0.6	551	681	762	888
0.7	481	627	702	830
0.8	404	578	653	771
0.9	328	519	606	722

Note: In horizontal and downflow applications, airflow should be limited to 1000 CFM due to condensate blowoff.

[a] Factory setting.

Table 12. Model – A5AHC003A1B30A

External Static (in w.g)	Airflow			
	Speed Taps: 208-230 Volts			
	Tap 2	Tap 3[a]	Tap 4	Tap 5
0.1	886	1027	1094	1196
0.2	844	989	1059	1164
0.3	791	947	1020	1130
0.4	719	896	978	1094
0.5	660	837	926	1053
0.6	584	778	864	1006
0.7	517	723	813	948
0.8	460	650	753	897
0.9	378	594	694	850

Note: In horizontal and downflow applications, airflow should be limited to 1000 CFM due to condensate blowoff.

[a] Factory setting.

Table 13. Model – A5AHC004A1B30A

External Static (in w.g)	Airflow			
	Speed Taps: 208-230 Volts			
	Tap 2	Tap 3[a]	Tap 4	Tap 5
0.1	1183	1267	1347	1390
0.2	1141	1230	1310	1346
0.3	1101	1189	1273	1309
0.4	1053	1149	1237	1275
0.5	1004	1105	1196	1236
0.6	957	1058	1155	1196
0.7	916	1016	1111	1153
0.8	870	974	1072	1113
0.9	828	935	1034	1073

Note: In horizontal and downflow applications, airflow should be limited to 1200 CFM due to condensate blowoff.

[a] Factory setting.

Table 14. Model – A5AHC004A1D30A

External Static (in w.g)	Airflow			
	Speed Taps: 208-230 Volts			
	Tap 2	Tap 3[a]	Tap 4	Tap 5
0.1	1230	1311	1385	1428
0.2	1187	1265	1342	1388
0.3	1140	1220	1299	1345
0.4	1089	1174	1256	1302
0.5	1036	1125	1210	1260
0.6	980	1070	1160	1211
0.7	909	1010	1110	1161
0.8	833	939	1053	1106
0.9	755	904	984	1041

[a] Factory setting.

Table 15. Model – A5AHC005A1D30A

External Static (in w.g)	Airflow			
	Speed Taps: 208-230 Volts			
	Tap 2	Tap 3[a]	Tap 4	Tap 5
0.1	1266	1340	1425	1577
0.2	1214	1286	1384	1535
0.3	1163	1242	1335	1494
0.4	1114	1195	1290	1452
0.5	1057	1144	1246	1410
0.6	996	1087	1187	1367
0.7	931	1026	1128	1319
0.8	853	961	1071	1268
0.9	779	889	1005	1211

[a] Factory setting.

Table 16. Model – A5AHC006A1D30A

External Static (in w.g)	Airflow			
	Speed TapAirflows: 208-230 Volts			
	Tap 2	Tap 3[a]	Tap 4	Tap 5
0.1	1550	1592	1804	1971
0.2	1511	1550	1767	1939
0.3	1470	1510	1734	1907
0.4	1426	1469	1697	1867
0.5	1379	1424	1656	1839
0.6	1324	1381	1615	1804
0.7	1278	1338	1575	1766
0.8	1229	1292	1536	1722
0.9	1173	1241	1492	1691

Note: In horizontal and downflow applications, airflow should be limited to 1700 CFM due to condensate blowoff.

[a] Factory setting.

Table 17. Model – A5AHC007A1D30A

External Static (in w.g)	Airflow			
	Speed Taps: 208-230 Volts			
	Tap 2	Tap 3[(a)]	Tap 4	Tap 5
0.1	1574	1648	1781	1935
0.2	1538	1608	1749	1900
0.3	1502	1577	1715	1872
0.4	1466	1542	1685	1842
0.5	1425	1506	1651	1814
0.6	1374	1466	1616	1784
0.7	1328	1423	1576	1749
0.8	1280	1377	1531	1712
0.9	1227	1329	1489	1674

Note: In horizontal and downflow applications, airflow should be limited to 1800 CFM due to condensate blowoff.

[(a)] Factory setting.

Notes:

- *Tap 1 is not an airflow selection. Black wire must always be on Tap 1.*
- *Values are with wet coil, no filter, and no heaters.*
- *CFM correction for dry coil = add 3%.*
- *First-stage airflow is approximately 75% of full-stage airflow setting.*

Electrical Data

Table 18. Model – A5AHC002A1B30A

Heater Model No.	No. of Circuits/ Phases	240 Volt					208 Volt				
		Capacity		Heater Amps per Circuit	Minimum Circuit Ampacity	Maximum Overload Protection	Capacity		Heater Amps per Circuit	Minimum Circuit Ampacity	Maximum Overload Protection
		kW	BTUH				kW	BTUH			
No Heater	—	—	—	2.6[(a)]	3	15	—	—	2.6[(a)]	3	15
BAYHTR1504BRK BAYHTR1504LUG	1/1	3.8	13100	16.0	23	25	2.9	9800	13.8	21	25
BAYHTR1505BRK BAYHTR1505LUG	1/1	4.8	16400	20.0	28	30	3.6	12300	17.3	25	25
BAYHTR1508BRK BAYHTR1508LUG	1/1	7.7	26200	32.0	43	45	5.8	19700	27.7	38	40
BAYHTR1510BRK BAYHTR1510LUG	1/1	9.6	32800	40.0	53	60	7.2	24600	34.6	47	50
BAYHTR3510LUG	1/3	9.6	32800	23.1	32	35	7.2	24600	20.0	28	30

[(a)] Motor Amps.

Table 19. Model – A5AHC003A1B30A

Heater Model No.	No. of Circuits/ Phases	240 Volt					208 Volt				
		Capacity		Heater Amps per Circuit	Minimum Circuit Ampacity	Maximum Overload Protection	Capacity		Heater Amps per Circuit	Minimum Circuit Ampacity	Maximum Overload Protection
		kW	BTUH				kW	BTUH			
No Heater	—	—	—	3.9[(a)]	5	15	—	—	3.9[(a)]	5	15
BAYHTR1504BRK BAYHTR1504LUG	1/1	3.8	13100	16.0	25	25	2.9	9800	13.8	22	25
BAYHTR1505BRK BAYHTR1505LUG	1/1	4.8	16400	20.0	30	30	3.6	12300	17.3	27	30
BAYHTR1508BRK BAYHTR1508LUG	1/1	7.7	26200	32.0	45	45	5.8	19700	27.7	39	40

Table 19. Model – A5AHC003A1B30A (continued)

Heater Model No.	No. of Circuits/ Phases	240 Volt					208 Volt				
		Capacity		Heater Amps per Circuit	Minimum Circuit Ampacity	Maximum Overload Protection	Capacity		Heater Amps per Circuit	Minimum Circuit Ampacity	Maximum Overload Protection
		kW	BTUH				kW	BTUH			
BAYHTR1510BRK BAYHTR1510LUG	1/1	9.6	32800	40.0	55	60	7.2	24600	34.6	48	50
BAYHTR1517BRK-Circuit 1[b]	2/1	9.6	32800	40.0	55	60	7.2	24600	34.6	48	50
BAYHTR1517BRK-Circuit 2		4.8	16400	20.0	25	25	3.6	12300	17.3	22	25
BAYHTR3510LUG	1/3	9.6	32800	23.1	33	35	7.2	24600	20.0	29	30
BAYHTR3517LUG	1/3	14.4	49100	34.6	48	50	10.8	36900	30.0	42	45

[a] Motor Amps.
[b] MCA and MOP for circuit 1 contains the motor amps.

Table 20. Models – A5AHC004A1B30A and A5AHC004A1D30A

Heater Model No.	No. of Circuits/ Phases	240 Volt					208 Volt				
		Capacity		Heater Amps per Circuit	Minimum Circuit Ampacity	Maximum Overload Protection	Capacity		Heater Amps per Circuit	Minimum Circuit Ampacity	Maximum Overload Protection
		kW	BTUH				kW	BTUH			
No Heater	—	—	—	3.9[a]	5	15	—	—	3.9[a]	5	15
BAYHTR1504BRK BAYHTR1504LUG	1/1	3.84	13100	16.0	25	25	2.88	9800	13.8	22	25
BAYHTR1505BRK BAYHTR1505LUG	1/1	4.80	16400	20.0	30	30	3.60	12300	17.3	27	30
BAYHTR1508BRK BAYHTR1508LUG	1/1	7.68	26200	32.0	45	45	5.76	19700	27.7	39	40
BAYHTR1510BRK BAYHTR1510LUG	1/1	9.60	32800	40.0	55	60	7.20	24600	34.6	48	50
BAYHTR1517BRK-Circuit 1[b]	2/1	9.60	32800	40.0	55	60	7.20	24600	34.6	48	50
BAYHTR1517BRK-Circuit 2		4.80	16400	20.0	25	25	3.60	12300	17.3	22	25
BAYHTR1523BRK-Circuit 1[b]	2/1	9.60	32800	40.0	55	60	7.20	24600	34.6	48	50
BAYHTR1523BRK-Circuit 2		9.60	32800	40.0	50	50	7.20	24600	34.6	43	45
BAYHTR3510LUG	1/3	9.60	32800	23.1	33	35	7.20	24600	20.0	29	30
BAYHTR3517LUG	1/3	14.40	49100	34.6	48	50	10.80	36900	30.0	42	45

[a] Motor Amps.
[b] MCA and MOP for circuit 1 contains the motor amps.

Table 21. Model – A5AHC005A1D30A

Heater Model No.	No. of Circuits/ Phases	240 Volt					208 Volt				
		Capacity		Heater Amps per Circuit	Minimum Circuit Ampacity	Maximum Overload Protection	Capacity		Heater Amps per Circuit	Minimum Circuit Ampacity	Maximum Overload Protection
		kW	BTUH				kW	BTUH			
No Heater	—	—	—	4.1[a]	5	15	—	—	4.1[a]	5	15
BAYHTR1504BRK BAYHTR1504LUG	1/1	3.8	13100	16.0	25	25	2.9	9800	13.8	22	25
BAYHTR1505BRK BAYHTR1505LUG	1/1	4.8	16400	20.0	30	30	3.6	12300	17.3	27	30
BAYHTR1508BRK BAYHTR1508LUG	1/1	7.7	26200	32.0	45	45	5.8	19700	27.7	40	40
BAYHTR1510BRK BAYHTR1510LUG	1/1	9.6	32800	40.0	55	60	7.2	24600	34.6	48	50

Table 21. Model – A5AHC005A1D30A (continued)

Heater Model No.	No. of Circuits/ Phases	240 Volt					208 Volt				
		Capacity		Heater Amps per Circuit	Minimum Circuit Ampacity	Maximum Overload Protection	Capacity		Heater Amps per Circuit	Minimum Circuit Ampacity	Maximum Overload Protection
		kW	BTUH				kW	BTUH			
BAYHTR1517BRK-Circuit 1[b]	2/1	9.6	32800	40.0	55	60	7.2	24600	34.6	48	50
BAYHTR1517BRK-Circuit 2		4.8	16400	20.0	25	25	3.6	12300	17.3	22	25
BAYHTR1523BRK-Circuit 1[b]	2/1	9.6	32800	40.0	55	60	7.2	24600	34.6	48	50
BAYHTR1523BRK-Circuit 2		9.6	32800	40.0	50	50	7.2	24600	34.6	43	45
BAYHTR3510LUG	1/3	9.6	32800	23.1	33	35	7.2	24600	20.0	30	30
BAYHTR3517LUG	1/3	14.4	49100	34.6	48	50	10.8	36900	30.0	42	45

[a] Motor Amps.
[b] MCA and MOP for circuit 1 contains the motor amps.

Table 22. Models – A5AHC006A1D30A and A5AHC007A1D30A

Heater Model No.	No. of Circuits/ Phases	240 Volt					208 Volt				
		Capacity		Heater Amps per Circuit	Minimum Circuit Ampacity	Maximum Overload Protection	Capacity		Heater Amps per Circuit	Minimum Circuit Ampacity	Maximum Overload Protection
		kW	BTUH				kW	BTUH			
No Heater	—	—	—	6.0[a]	8	15	—	—	6.0[a]	8	15
BAYHTR1504BRK BAYHTR1504LUG	1/1	3.8	13100	16.0	28	30	2.9	9800	13.8	25	25
BAYHTR1505BRK BAYHTR1505LUG	1/1	4.8	16400	20.0	33	35	3.6	12300	17.3	29	30
BAYHTR1508BRK BAYHTR1508LUG	1/1	7.7	26200	32.0	48	50	5.8	19700	27.7	42	45
BAYHTR1510BRK BAYHTR1510LUG	1/1	9.6	32800	40.0	58	60	7.2	24600	34.6	51	60
BAYHTR1517BRK-Circuit 1[b]	2/1	9.6	32800	40.0	58	60	7.2	24600	34.6	51	60
BAYHTR1517BRK-Circuit 2		4.8	16400	20.0	25	25	3.6	12300	17.3	22	25
BAYHTR1523BRK-Circuit 1[b]	2/1	9.6	32800	40.0	58	60	7.2	24600	34.6	51	60
BAYHTR1523BRK-Circuit 2		9.6	32800	40.0	50	50	7.2	24600	34.6	43	45
BAYHTR1525BRK-Circuit 1[b]	4/1	6.0	20500	25.0	39	40	4.5	15400	21.6	35	35
BAYHTR1525BRK-Circuit 2		6.0	20500	25.0	31	35	4.5	15400	21.6	27	30
BAYHTR1525BRK-Circuit 3		6.0	20500	25.0	31	35	4.5	15400	21.6	27	30
BAYHTR1525BRK-Circuit 4		6.0	20500	25.0	31	35	4.5	15400	21.6	27	30
BAYHTR3510LUG	1/3	9.6	32800	23.1	36	40	7.2	24600	20.0	32	35
BAYHTR3517LUG	1/3	14.4	49100	34.6	50	50	10.8	36900	30.0	44	45

[a] Motor Amps.
[b] MCA and MOP for circuit 1 contains the motor amps.

Wiring Diagram

Figure 1. Wiring diagram

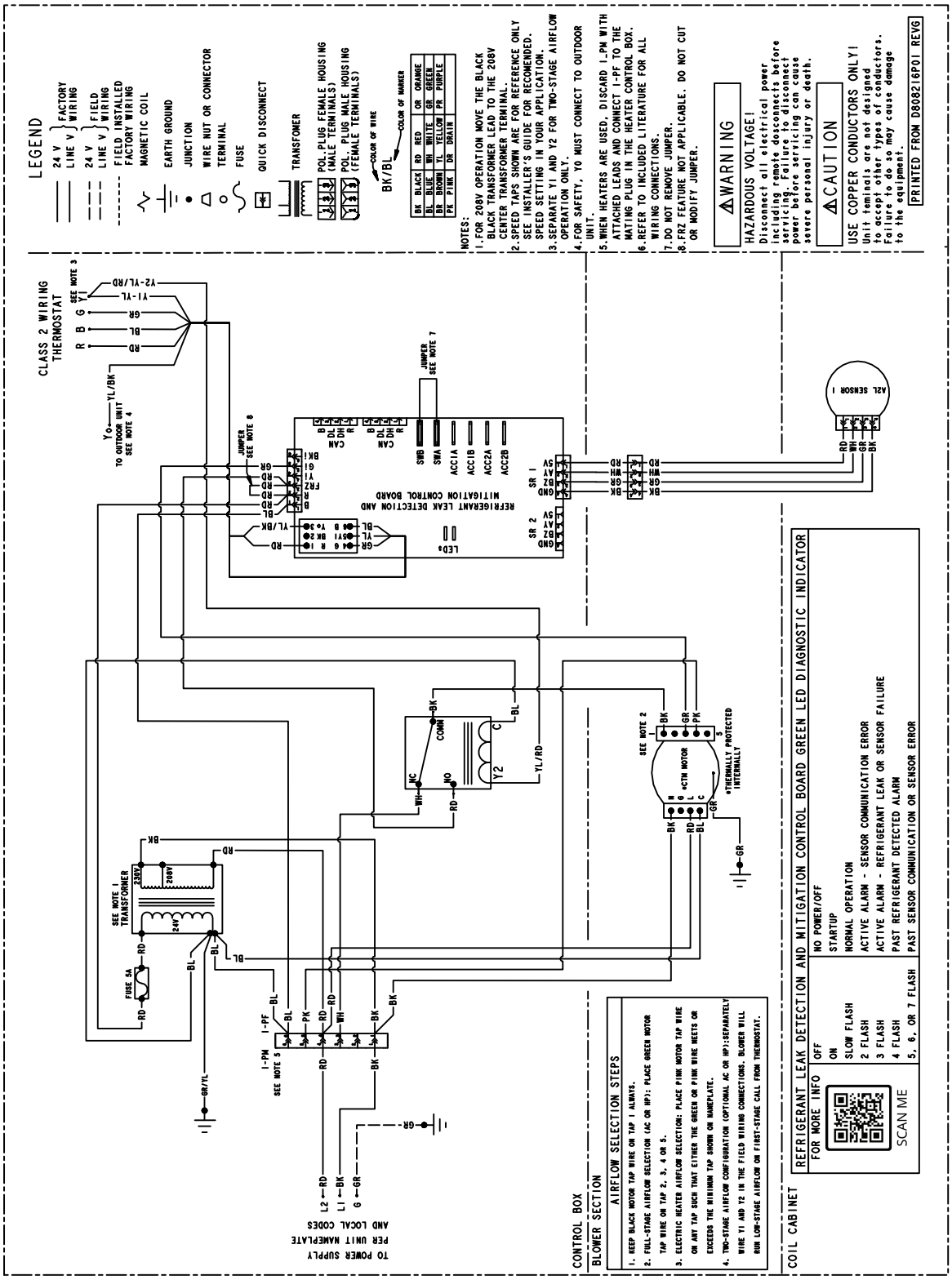

Field Wiring Diagrams

Figure 2. Single stage, cooling only

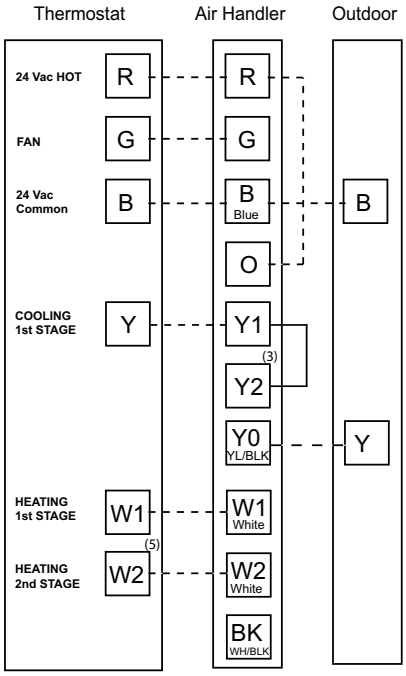

Figure 3. Single stage, HP

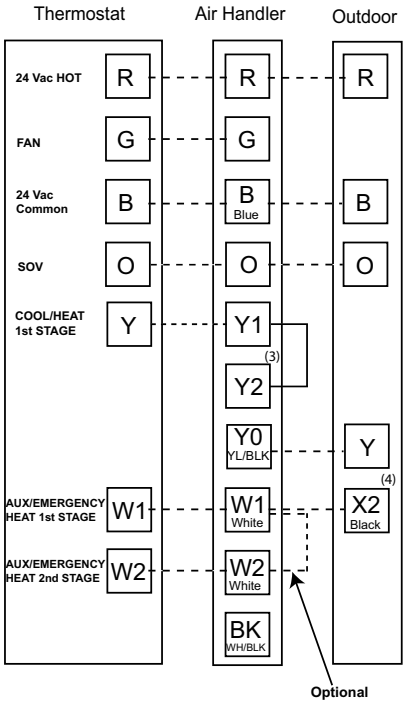

Figure 4. 2 Stage indoor airflow, cooling only

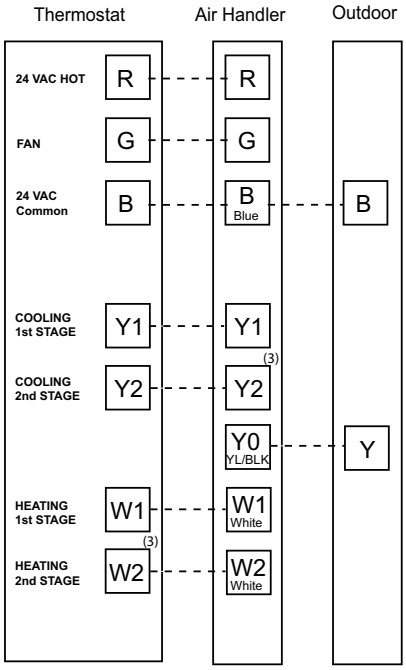

Figure 5. 2 Stage indoor airflow, HP

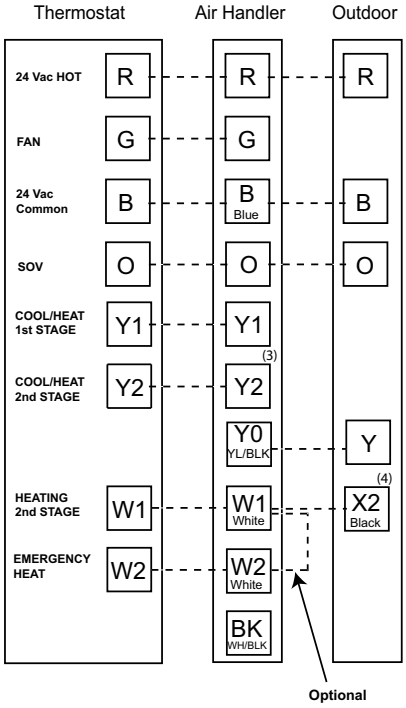

Notes:

1. *Units with pigtails require wirenuts for connections.*
2. *Cap all unused wires.*
3. *In AC systems for multiple stages of electric heat, jumper W1 and W2 together if comfort control has only one stage of heat.*
4. *X2 is only needed if not using certain Trane or American Standard thermostats.*

External Switches and Accessories

The following optional connections are available on the mitigation control board (see connection diagrams Figure 6, p. 17):

- ACC1 and ACC2 accessory connections. Use when connecting an accessory to the air handler that could be considered a source of ignition (ex. electronic air cleaner).
- Aoa/Aob audible alarm connections. Use when configuring an audible alarm on the refrigerant detection system of the air handler.

ACC1, ACC2, and Aoa/Aob are dry contacts and need source voltage provided from either the accessory or the unit's control wiring.

Connect using field-supplied 3/16-inch (Aoa/Aob) or 1/4-inch (ACC1, ACC2) female spade connections.

Figure 6. Accessories diagram

SCAN ME

Scan QR code to view instructional videos on field wiring for CleanEffects or AccuClean electronic air cleaners.

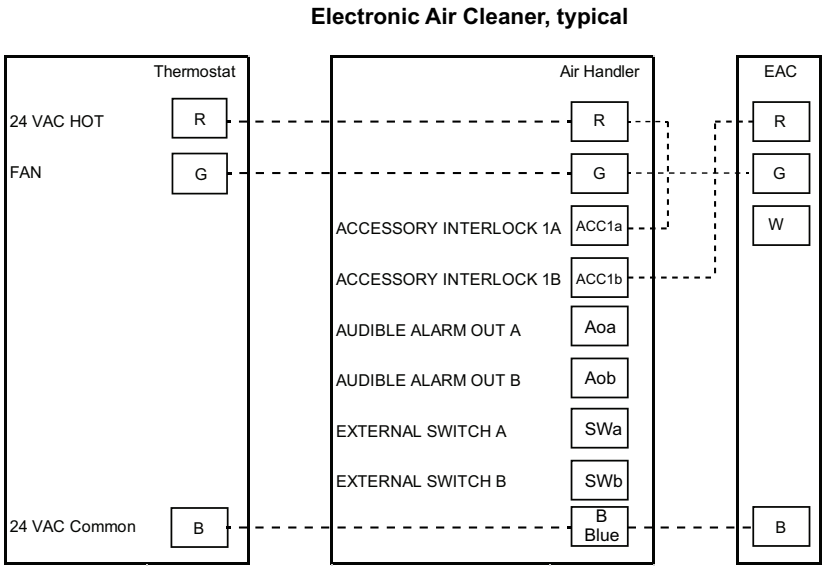

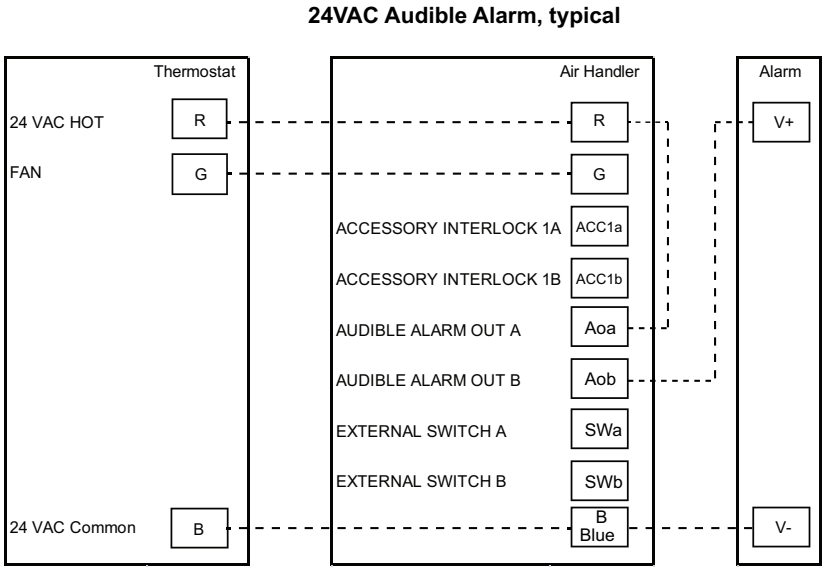

Unit Convertibility

Figure 7. Multi-position air handler

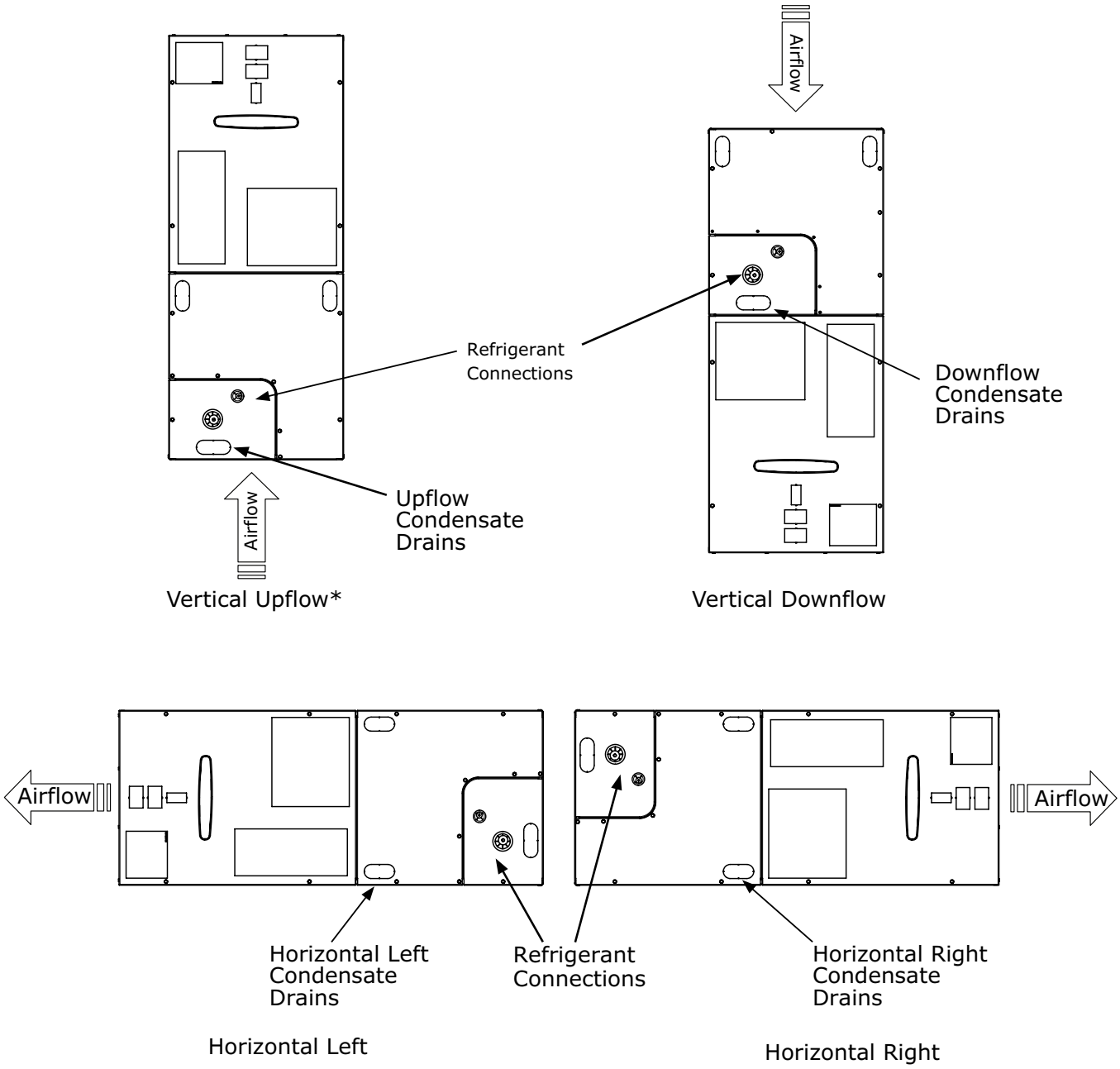

Note: ** = No internal modifications required.*

Dimensional Data

Figure 8. Dimensional data

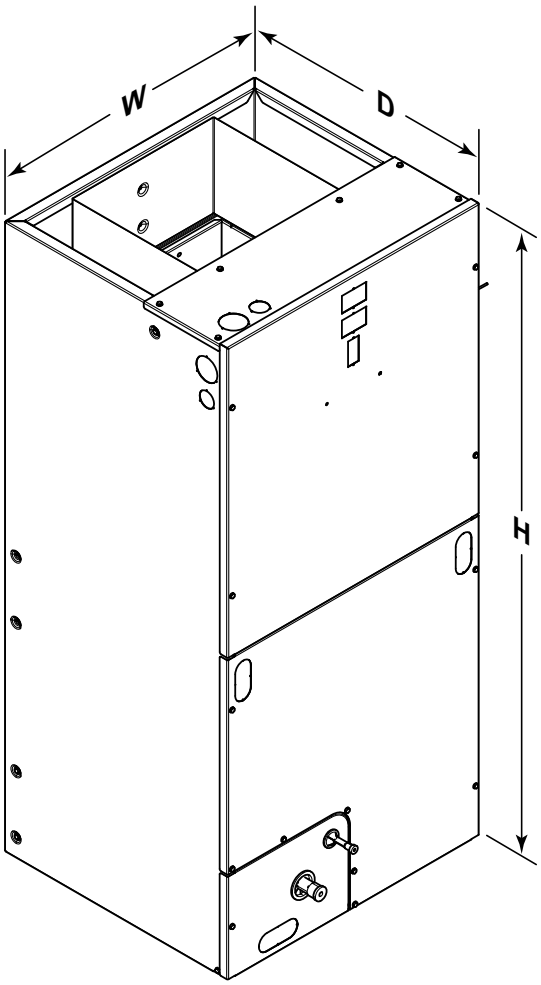

Table 23. Dimensions (inch)

Model No.	H	W	D
A5AHC002A1B	21.08	18.50	21.08
A5AHC003A1B	46.77	18.50	21.08
A5AHC004A1B	51.76	18.50	21.08
A5AHC004A1D, C005A1D, C006A1D	51.27	23.50	21.08
A5AHC007A1D	57.40	23.50	21.08

Figure 9. Dimensional data

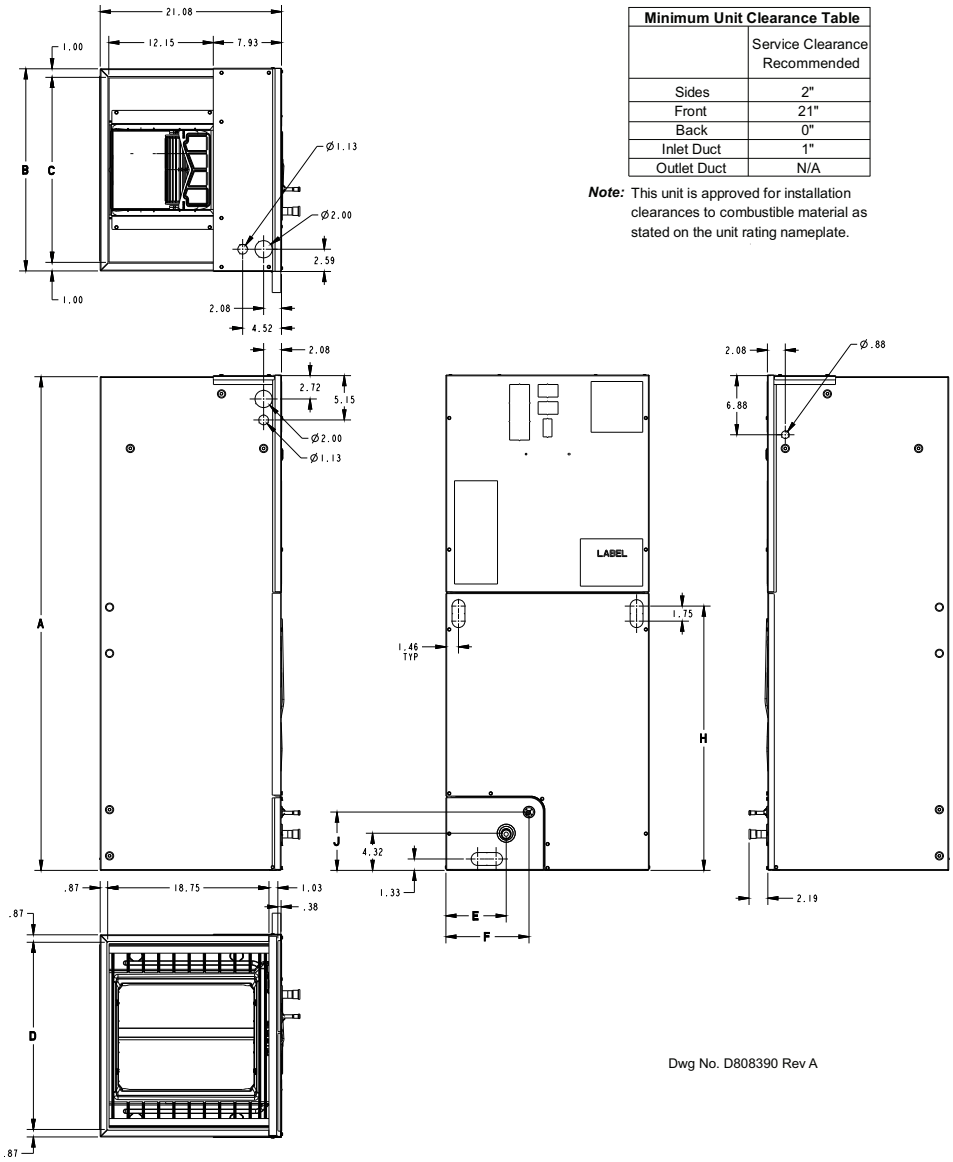

Minimum Unit Clearance Table	
	Service Clearance Recommended
Sides	2"
Front	21"
Back	0"
Inlet Duct	1"
Outlet Duct	N/A

Note: This unit is approved for installation clearances to combustible material as stated on the unit rating nameplate.

Note: *All dimensions are reference dimensions.*

Table 24. Dimensions (inch)

Air Handler Model	A	B	C	D	E	F	H	J	Flow Control	Gas Line Braze
A5AHC002A1B	45.02	18.50	16.50	16.75	5.43	7.08	18.32	5.76	TXV	3/4
A5AHC003A1B	46.77	18.50	16.50	16.75	5.43	7.08	20.07	5.76	TXV	3/4
A5AHC004A1B	51.76	18.50	16.50	16.75	5.43	7.08	24.58	5.76	TXV	7/8
A5AHC004A1D, 005A1D, 006A1D	51.27	23.50	21.50	21.75	7.01	9.66	24.58	6.76	TXV	7/8
A5AHC007A1D	57.40	23.50	21.50	21.75	7.01	9.66	30.71	6.76	TXV	7/8

Notes

About Trane and American Standard Heating and Air Conditioning

Trane and American Standard create comfortable, energy efficient indoor environments for residential applications. For more information, please visit www.trane.com or www.americanstandardair.com.

The manufacturer has a policy of continuous data improvement and it reserves the right to change design and specifications without notice. We are committed to using environmentally conscious print practices.

AHR-PSD008B-EN 05 Nov 2025
Supersedes AHR-PSD008A-EN (June 2025)

©2025