Installation, Operation, and Maintenance

Condensing Units

A5AC3018B
A5AC3024B
A5AC3030B
A5AC3036B
A5AC3042B
A5AC3048B
A5AC3060B

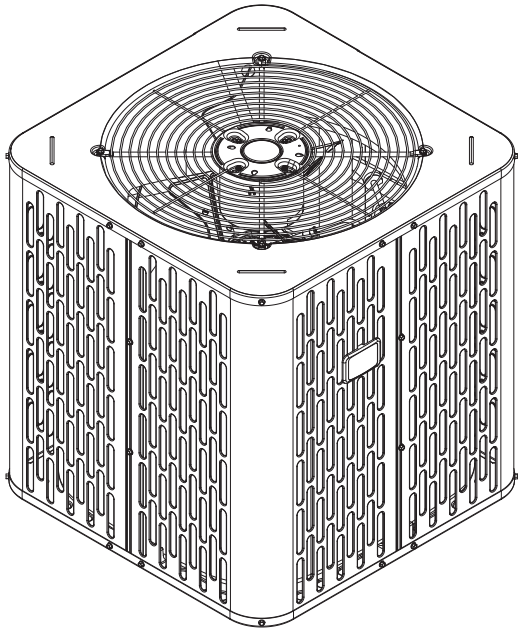

Note: *Graphics in this document are for representation only. Actual model may differ in appearance.*

⚠ SAFETY WARNING

Only qualified personnel should install and service the equipment. The installation, starting up, and servicing of heating, ventilating, and air-conditioning equipment can be hazardous and requires specific knowledge and training. Improperly installed, adjusted or altered equipment by an unqualified person could result in death or serious injury. When working on the equipment, observe all precautions in the literature and on the tags, stickers, and labels that are attached to the equipment.

January 2026

ODR-SVX001C-EN

Introduction

Read this manual thoroughly before operating or servicing this unit.

This document is customer property and is to remain with this unit. Return to the service information pack upon completion of work.

Warnings, Cautions, and Notices

Safety advisories appear throughout this manual as required. Your personal safety and the proper operation of this machine depend upon the strict observance of these precautions.

The three types of advisories are defined as follows:

⚠ WARNING	Indicates a potentially hazardous situation which, if not avoided, could result in death or serious injury.
⚠ CAUTION	Indicates a potentially hazardous situation which, if not avoided, could result in minor or moderate injury. It could also be used to alert against unsafe practices.
NOTICE	Indicates a situation that could result in equipment or property-damage only accidents.

Important Environmental Concerns

Scientific research has shown that certain man-made chemicals can affect the earth's naturally occurring stratospheric ozone layer when released to the atmosphere. In particular, several of the identified chemicals that may affect the ozone layer are refrigerants that contain Chlorine, Fluorine and Carbon (CFCs) and those containing Hydrogen, Chlorine, Fluorine and Carbon (HCFCs). Not all refrigerants containing these compounds have the same potential impact to the environment. Trane advocates the responsible handling of all refrigerants.

Important Responsible Refrigerant Practices

Trane believes that responsible refrigerant practices are important to the environment, our customers, and the air conditioning industry. All technicians who handle refrigerants must be certified according to local rules. For the USA, the Federal Clean Air Act (Section 608) sets forth the requirements for handling, reclaiming, recovering and recycling of certain refrigerants and the equipment that is used in these service procedures. In addition, some states or municipalities may have additional requirements that must also be adhered to for responsible management of refrigerants. Know the applicable laws and follow them.

⚠ WARNING

Proper Field Wiring and Grounding Required!

Failure to follow code could result in death or serious injury.

All field wiring MUST be performed by qualified personnel. Improperly installed and grounded field wiring poses FIRE and ELECTROCUTION hazards. To avoid these hazards, you MUST follow requirements for field wiring installation and grounding as described in NEC and your local/state/national electrical codes.

⚠ WARNING

Personal Protective Equipment (PPE) Required!

Failure to wear proper PPE for the job being undertaken could result in death or serious injury.

Technicians, in order to protect themselves from potential electrical, mechanical, and chemical hazards, MUST follow precautions in this manual and on the tags, stickers, and labels, as well as the instructions below:

- **Before installing/servicing this unit, technicians MUST put on all PPE required for the work being undertaken (Examples; cut resistant gloves/ sleeves, butyl gloves, safety glasses, hard hat/ bump cap, fall protection, electrical PPE and arc flash clothing). ALWAYS refer to appropriate Safety Data Sheets (SDS) and OSHA guidelines for proper PPE.**
- **When working with or around hazardous chemicals, ALWAYS refer to the appropriate SDS and OSHA/GHS (Global Harmonized System of Classification and Labelling of Chemicals) guidelines for information on allowable personal exposure levels, proper respiratory protection and handling instructions.**
- **If there is a risk of energized electrical contact, arc, or flash, technicians MUST put on all PPE in accordance with OSHA, NFPA 70E, or other country-specific requirements for arc flash protection, PRIOR to servicing the unit. NEVER PERFORM ANY SWITCHING, DISCONNECTING, OR VOLTAGE TESTING WITHOUT PROPER ELECTRICAL PPE AND ARC FLASH CLOTHING. ENSURE ELECTRICAL METERS AND EQUIPMENT ARE PROPERLY RATED FOR INTENDED VOLTAGE.**

⚠ WARNING

Follow EHS Policies!

Failure to follow instructions below could result in death or serious injury.

- **All Trane personnel must follow the company's Environmental, Health and Safety (EHS) policies when performing work such as hot work, electrical, fall protection, lockout/tagout, refrigerant handling, etc. Where local regulations are more stringent than these policies, those regulations supersede these policies.**
- **Non-Trane personnel should always follow local regulations.**

⚠ WARNING

Cancer and Reproductive Harm!

This product can expose you to chemicals, including lead, which are known to the State of California to cause cancer and birth defects or other reproductive harm. For more information go to www.P65Warnings.ca.gov.

⚠ WARNING

Safety Hazard!

Failure to follow instructions below could result in death or serious injury or property damage.

This unit is not to be used by persons (including children) with reduced physical, sensory, or mental capabilities, or lack of experience and knowledge, unless they have been given supervision or instruction concerning the use of the appliance by a person responsible for their safety.

Do not allow children to play or climb on the unit or to clean or maintain the unit without supervision.

⚠ WARNING

Safety Hazard!

Failure to follow instructions below could result in death or serious injury and/or property damage.

Only qualified personnel should install and service the equipment. The installation, starting up, and servicing of heating, ventilating, and air-conditioning equipment can be hazardous and requires specific knowledge and training. Improperly installed, adjusted or altered equipment by an unqualified person could result in death or serious injury. When working on the equipment, observe all precautions in the literature and on the tags, stickers, and labels that are attached to the equipment.

⚠ WARNING

Risk of Fire — Flammable Refrigerant!

Failure to follow instructions below could result in death or serious injury, and equipment damage.

- **To be repaired only by trained service personnel.**
- **Do not puncture refrigerant tubing.**
- **Dispose of properly in accordance with federal or local regulations.**

⚠ WARNING

Safety Hazard!

Failure to follow instructions below could result in death or serious injury and/or property damage.

Only qualified personnel with adequate electrical and mechanical experience must repair the unit. The manufacturer or seller is not responsible for any interpretation or resulting liability.

⚠ WARNING

System Charge!

Failure to follow instructions below could result in abrupt release of system charge and could result in serious injury or property damage.

When opening the suction and liquid line service valve, turn the valve stem counterclockwise only until the stem contacts the rolled edge. Do not apply torque.

⚠ WARNING

Ventilation Required!

Failure to follow instructions below could result in death or serious injury or property damage.

Confirm the area is adequately ventilated before breaking into the system or conducting any hot work.

⚠ WARNING

Safety Hazard!

Failure to follow instructions below could result in death or serious injury and equipment or property damage.

- **Store the appliance in a room without continuously operating ignition sources(for example: open flames, an operating gas appliance, or an operating electric heater).**
- **Do not pierce or burn.**
- **Be cautious that refrigerants may be odorless.**

⚠ WARNING

Live Electrical Components!

Failure to follow all electrical safety precautions when exposed to live electrical components could result in death or serious injury.

When it is necessary to work with live electrical components, have a qualified licensed electrician or other individual who has been properly trained in handling live electrical components perform these tasks.

⚠ CAUTION

Brazed Joints!

Failure to follow instructions below could result in minor to moderate injury or equipment damage.

When using existing refrigerant lines, verify all joints are brazed and not soldered.

⚠ CAUTION

Hot Surface!

Failure to follow instructions below could result in minor to severe burns.

Do not touch top of compressor. It may be hot.

⚠ CAUTION

Unit Contains R–454B Refrigerant!

Failure to use proper service tools may result in equipment damage or personal injury.

Use only R-454B refrigerant and approved compressor oil.

Copyright

This document and the information in it are the property of Trane, and may not be used or reproduced in whole or in part without written permission. Trane reserves the right to revise this publication at any time, and to make changes to its content without obligation to notify any person of such revision or change.

Trademark

All trademarks referenced in this document are the trademarks of their respective owners.

Revision History

- Updated model numbers throughout the document
- Updated operating range values in the Pre-Installation chapter.
- Updated unit dimensions and weight values in the Pre-Installation chapter.
- Updated refrigerant line considerations values in the Pre-Installation chapter.
- Updated low voltage connection diagrams in the Electrical chapter.
- Updated values in subcooling charging in cooling tables in the System Charge Adjustment chapter.
- Updated wiring diagram in the Wiring Diagrams chapter.
- Updated pressure curves in the Pressure Curve chapter.
- Updated refrigeration circuits in the Refrigeration Circuits chapter.

Table of Contents

Pre-Installation 6
General 6
Operating Range. 7
Unit Location Considerations 7
Unit Dimensions and Weight. 7
Refrigerant Piping Limits 7
Suggested Locations for Best Reliability 8
Unit Preparation 8
Prepare the Unit for Installation 8
Setting the Unit. 8
Pad Installation 8
Refrigeration 9
Refrigerant Line Considerations. 9
Refrigerant Line Routing 9
Refrigerant Line Brazing 11
Refrigerant Line Leak Check. 12
Evacuation and Servicing 14
Evacuate the Refrigerant Lines and Indoor Coil 14
Servicing 14
Service Valves 14
Open the Gas Service Valve First 14
Open the Liquid Service Valve Second 15
Electrical 16
Low Voltage 16
Low Voltage Maximum Wire Length. 16
Low Voltage Connection Diagrams 16
Mitigation Board Guidelines 17
High Voltage 18
High Voltage Power Supply. 18
High Voltage Disconnect Switch. 18
High Voltage Ground 18
System Start-Up 19
System Charge Adjustment 20
Temperature Measurements 20
Subcooling Charging in Cooling (Above 55º F Outdoor Temp.). 20
Charging the Unit 21
Weigh-In Method for Charging. 22
Checkout Procedures. 24
Operational and Checkout Procedures 24
Wiring Diagrams. 25
Pressure Curves. 27
Refrigeration Circuits 31
Refrigerant Detection System 32

Pre-Installation

General

⚠ WARNING

Safety Hazard!

Failure to follow instructions below could result in death or serious injury and/or property damage.

Only qualified personnel should install and service the equipment. The installation, starting up, and servicing of heating, ventilating, and air-conditioning equipment can be hazardous and requires specific knowledge and training. Improperly installed, adjusted or altered equipment by an unqualified person could result in death or serious injury. When working on the equipment, observe all precautions in the literature and on the tags, stickers, and labels that are attached to the equipment.

⚠ WARNING

Risk of Fire — Flammable Refrigerant!

Failure to follow instructions below could result in death or serious injury, and equipment damage.

- **To be repaired only by trained service personnel.**
- **Do not puncture refrigerant tubing.**
- **Dispose of properly in accordance with federal or local regulations.**

⚠ WARNING

Safety Hazard!

Failure to follow instructions below could result in death or serious injury and/or property damage.

Only qualified personnel with adequate electrical and mechanical experience must repair the unit. The manufacturer or seller is not responsible for any interpretation or resulting liability.

⚠ CAUTION

Unit Contains R–454B Refrigerant!

Failure to use proper service tools may result in equipment damage or personal injury.

Use only R-454B refrigerant and approved compressor oil.

⚠ WARNING

System Charge!

Failure to follow instructions below could result in abrupt release of system charge and could result in serious injury or property damage.

When opening the suction and liquid line service valve, turn the valve stem counterclockwise only until the stem contacts the rolled edge. Do not apply torque.

⚠ WARNING

Ventilation Required!

Failure to follow instructions below could result in death or serious injury or property damage.

Confirm the area is adequately ventilated before breaking into the system or conducting any hot work.

⚠ WARNING

Live Electrical Components!

Failure to follow all electrical safety precautions when exposed to live electrical components could result in death or serious injury.

When it is necessary to work with live electrical components, have a qualified licensed electrician or other individual who has been properly trained in handling live electrical components perform these tasks.

⚠ WARNING

Safety Hazard!

Failure to follow instructions below could result in death or serious injury or property damage.

This unit is not to be used by persons (including children) with reduced physical, sensory, or mental capabilities, or lack of experience and knowledge, unless they have been given supervision or instruction concerning the use of the appliance by a person responsible for their safety.

Do not allow children to play or climb on the unit or to clean or maintain the unit without supervision.

⚠ CAUTION

Brazed Joints!

Failure to follow instructions below could result in minor to moderate injury or equipment damage.

When using existing refrigerant lines, verify all joints are brazed and not soldered.

⚠ CAUTION

Hot Surface!

Failure to follow instructions below could result in minor to severe burns.

Do not touch top of compressor. It may be hot.

⚠ WARNING

Cancer and Reproductive Harm!

This product can expose you to chemicals, including lead, which are known to the State of California to cause cancer and birth defects or other reproductive harm. For more information go to www.P65Warnings.ca.gov.

⚠ WARNING

Ventilation Required!

Failure to follow instructions below could result in death or serious injury or property damage.
Confirm the area is adequately ventilated before breaking into the system or conducting any hot work.

Note: *The manufacturer recommends installing only approved matched indoor and outdoor systems. All of the manufacture's split systems are AHRI rated only with TXV/EEV indoor systems. Some of the benefits of installing approved matched indoor and outdoor split systems are maximum efficiency, optimum performance and the best overall system reliability.*

Operating Range

Table 1. Operating range

Mode	Model	Operating Range
Cooling	1.5 – 5 Ton	55°F – 115°F

Unit Location Considerations

Unit Dimensions and Weight

Table 2. Unit dimensions and weight

Models	H x D x W (in.)	Weight (lb) [a]
A5AC3018B	29 x 24 x 24	130
A5AC3024B	29 x 24 x 24	130
A5AC3030B	29 x 24 x 24	130
A5AC3036B	29 x 26 x 26	134
A5AC3042B	29 x 30 x 30	144
A5AC3048B	29 x 30 x 30	161
A5AC3060B	29 x 34 x 34	161

[a] Weight values are estimated uncrated.

When mounting the outdoor unit on a roof, be sure the roof will support the unit's weight.

Properly selected isolation is recommended to alleviate sound or vibration transmission to the building structure.

Figure 1. Unit dimensions

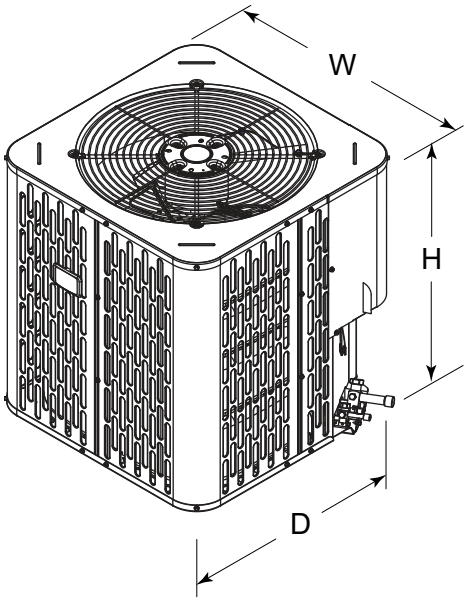

Refrigerant Piping Limits

- The maximum total length of refrigerant lines from outdoor to indoor unit should not exceed 150 feet (including lift).
- The maximum vertical change should not exceed 50 feet.
- Service valve connection diameters are shown in Table 3, p. 9.

Note: *For other line lengths, see the Refrigerant Piping — Application Guide, (SS-APG006*-EN) or Refrigerant Piping Software Program.*

Figure 2. Refrigerant total line length limit

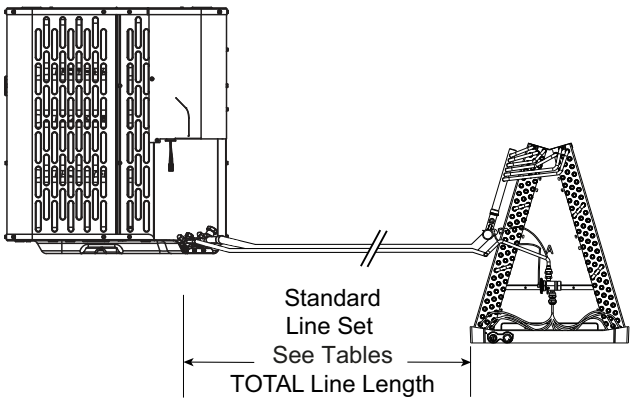

Figure 3. Refrigerant piping vertical change limit

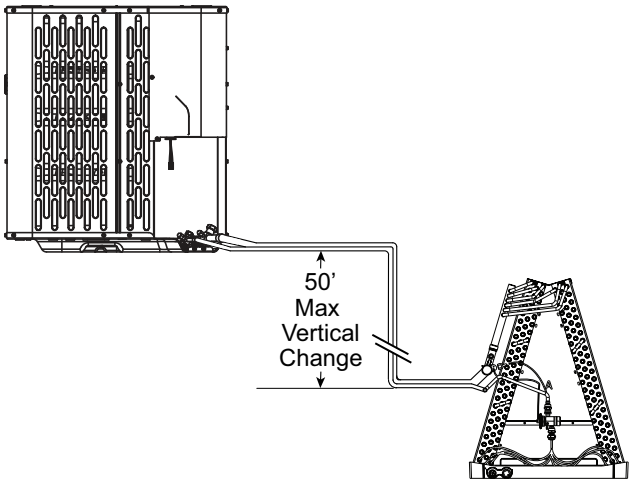

Figure 4. Refrigerant piping vertical change limit

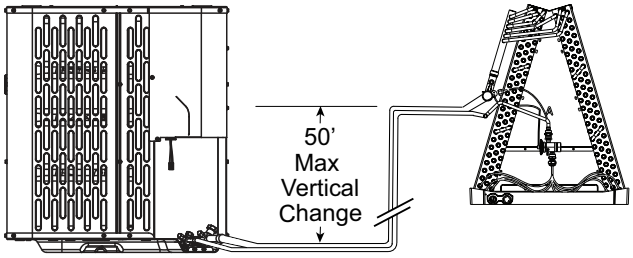

Suggested Locations for Best Reliability

- Ensure the top discharge area is unrestricted for at least five (5) feet above the unit.
- Three (3) feet clearance must be provided in front of the control box (access panels) and any other side requiring service.
- It is not recommended to install in a location where noise may distract the building occupants. Some examples of these types of locations are sleeping quarters and by windows of a living area. Please discuss location with the building owner prior to installation.
- Avoid locations such as near windows where condensation and freezing defrost vapor can annoy a customer.
- Position the outdoor unit a minimum of 12-inch from any wall or surrounding shrubbery to ensure adequate airflow.
- Outdoor unit location must be far enough away from any structure to prevent excess roof runoff water or icicles from falling directly on the unit.

Figure 5. Suggested locations for best reliability

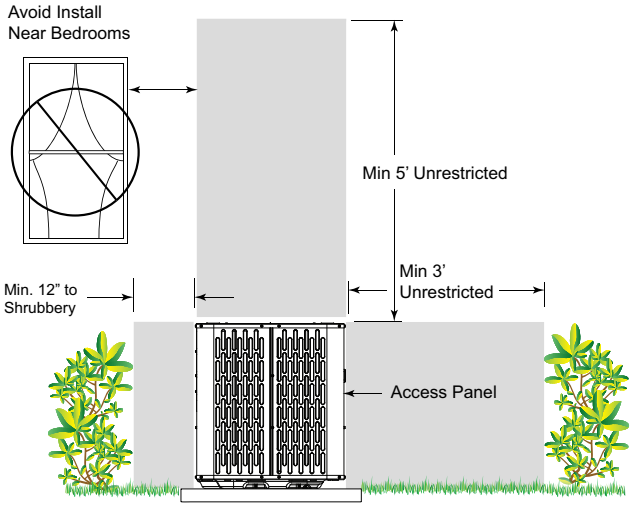

Unit Preparation

Prepare the Unit for Installation

Check for damage and report promptly to the carrier any damage found to the unit.

Setting the Unit

Pad Installation

When installing the unit on a support pad, such as a concrete slab, consider the following:

- The pad should be at least 1-inch larger than the unit on all sides.
- The pad must be separate from any structure.
- The pad must be level.
- The pad should be high enough above grade to allow for drainage.
- The pad location must comply with National, State, and Local codes.

For other applications refer to application guide.

Refrigeration

Refrigerant Line Considerations

Table 3. Refrigerant line and service valve connection sizes

Model	Rated Line Sizes (in.)		Service Valve Connection Sizes (in.)	
	Vapor Line	Liquid Line	Vapor Line Connec-tion	Liquid Line Connec-tion
A5AC3018B	3/4	5/16	3/4	5/16
A5AC3024B	3/4	5/16	3/4	5/16
A5AC3030B	3/4	5/16	3/4	5/16
A5AC3036B	3/4	5/16	3/4	5/16
A5AC3042B	3/4	5/16	3/4	5/16
A5AC3048B	7/8	5/16	7/8	5/16
A5AC3060B	1-1/8	3/8	7/8	3/8

Table 4. Alternate refrigerant line and service valve connection sizes

Model	Alternate Line Sizes (in.)		Service Valve Connection Sizes (in.)	
	Vapor Line	Liquid Line	Vapor Line Connec-tion	Liquid Line Connec-tion
A5AC3018B	5/8	3/8	3/4	5/16
A5AC3024B	5/8	3/8	3/4	5/16
A5AC3030B	5/8	3/8	3/4	5/16
A5AC3036B	5/8	3/8	3/4	5/16
A5AC3042B	7/8	3/8	3/4	5/16
A5AC3048B	3/4	3/8	7/8	5/16
A5AC3060B	7/8	3/8	7/8	3/8

Factory Charge

The outdoor condensing units are factory charged with the system charge required for the outdoor condensing unit, fifteen (15) ft. of tested connecting line, and the nominal rated indoor evaporative coil match. Always verify proper system charge via subcooling (TXV/EEV) or superheat (fixed orifice) per the unit nameplate.

Refrigerant Line Insulation

Important: *The vapor line must always be insulated. Do not allow the Liquid Line and Vapor Line to come in direct (metal to metal) contact.*

Figure 6. Refrigerant line insulation

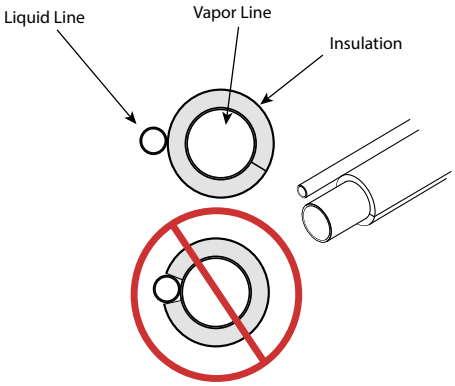

Refrigerant Line Routing

Precautions

Important: *Take precautions to prevent noise within the building structure due to vibration transmission from the refrigerant lines.*

Comply with national, state, and local codes when isolating line sets from joists, rafters, walls, or other structural elements.

For example:

- When the refrigerant lines need to be fastened to floor joists or other framing in a structure, use isolation type hangers.
- Isolation hangers should also be used when refrigerant lines are run in stud spaces or enclosed ceilings.
- Where the refrigerant lines run through a wall or sill, they should be insulated and isolated.
- Isolate the lines from all ductwork.
- Minimize the number of 90º turns.

Secure the vapor line from joists using isolators every 8 feet. Secure the liquid line directly to the vapor line using tape, wire, or other appropriate method every 8 feet.

Figure 7. Isolation from joist/rafter

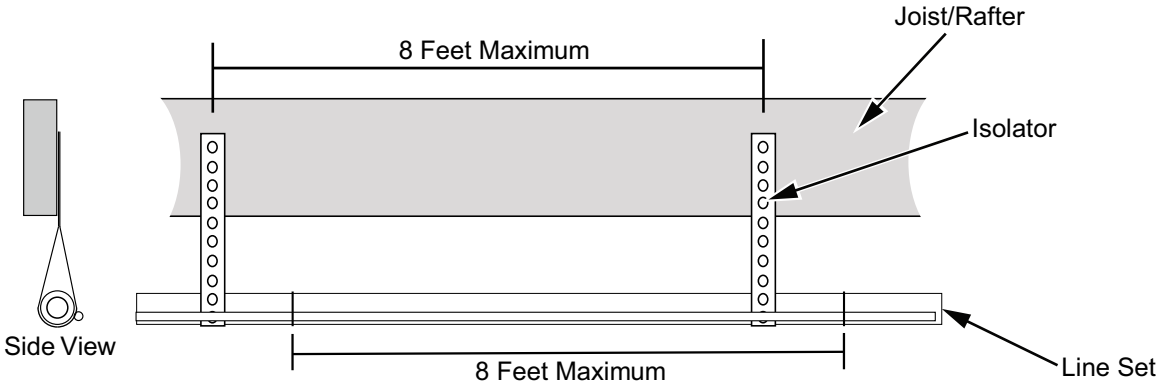

Secure the vapor line using isolators every 8 feet. Secure the liquid line directly to the vapor line using tape, wire, or other appropriate method every 8 feet.

Figure 8. Isolation in wall spaces

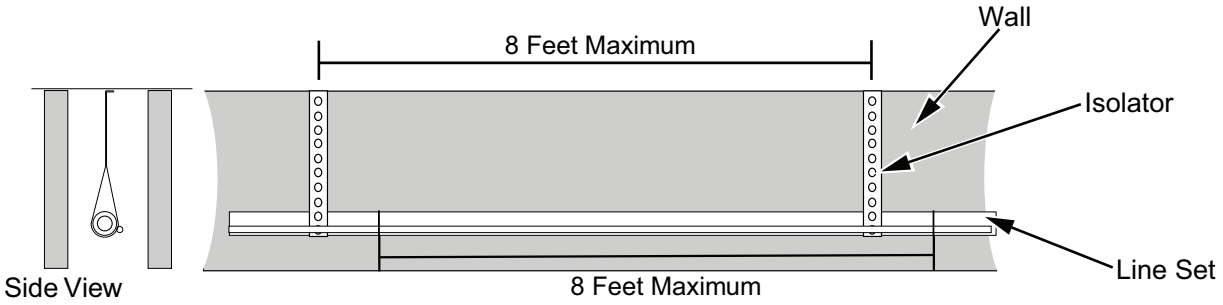

Figure 9. Isolation through wall

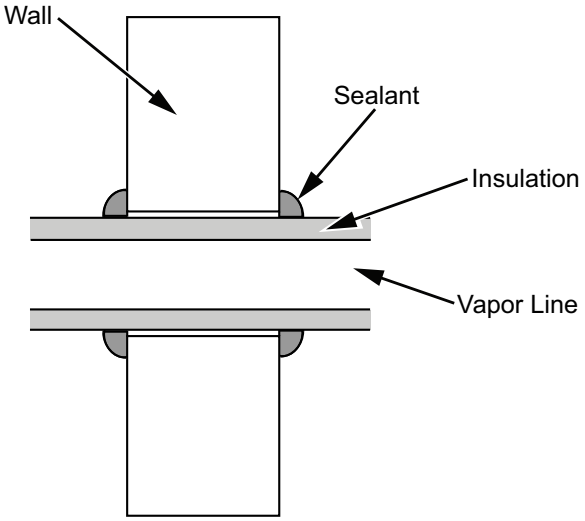

Figure 10. Incorrect lineset installation

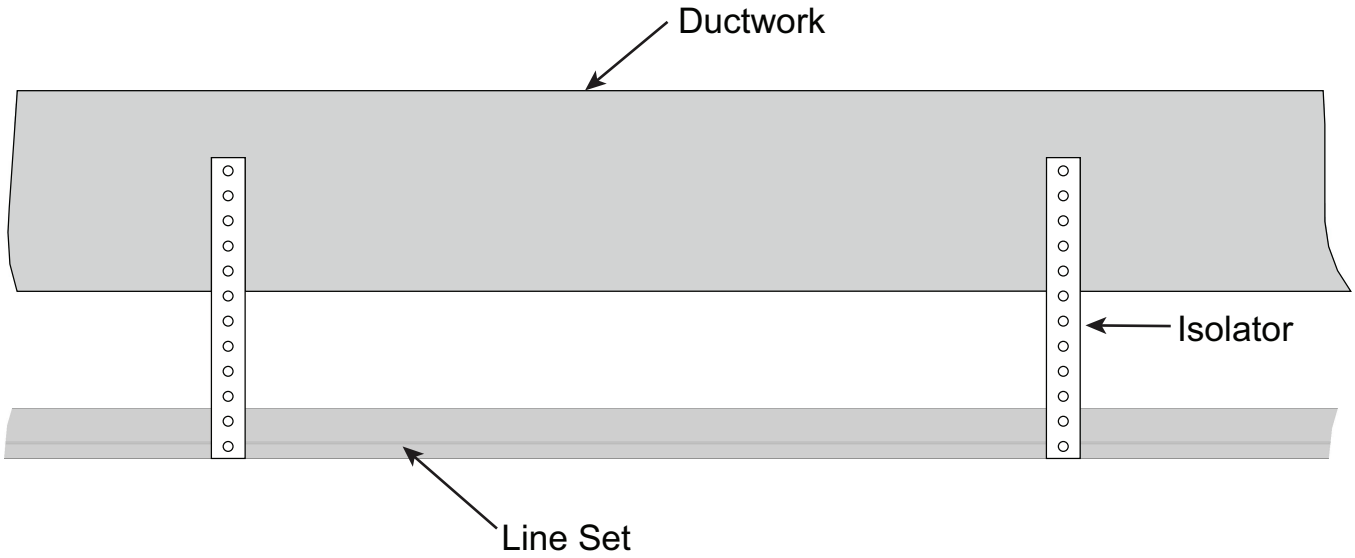

Do not hang line sets from ductwork.

Refrigerant Line Brazing

Braze the Refrigerant Lines

1. Remove caps or plugs. Use a deburing tool to debur the pipe ends. Clean both internal and external surfaces of the tubing using an emery cloth.
2. Remove the pressure tap cap and valve cores from both service valves.
3. Purge the refrigerant lines and indoor coil with dry nitrogen.

Note: *A2L equipment shall have red marked service ports and pipes through which refrigerant is serviced.*

4. Wrap a wet rag around the valve body to avoid heat damage and continue the dry nitrogen purge.
   a. Braze the refrigerant lines to the service valves.
   b. For units shipped with a field-installed external drier, check liquid line filter driers directional flow arrow to confirm correct direction of refrigeration flow (away from outdoor unit and toward evaporator coil) as illustrated. Braze the filter drier to the Liquid Line.
   c. Continue the dry nitrogen purge. Do not remove the wet rag until all brazing is completed.

Important: *Remove the wet rag before stopping the dry nitrogen purge.*

Notes:

- *Install drier in Liquid Line.*
- *Precautions should be taken to avoid heat damage to basepan during brazing. It is recommended to keep the flame directly off of the basepan.*

5. Replace the pressure tap valve cores and plastic tabs after the service valves have cooled.

Figure 11. Removal of caps or plugs from pipe ends

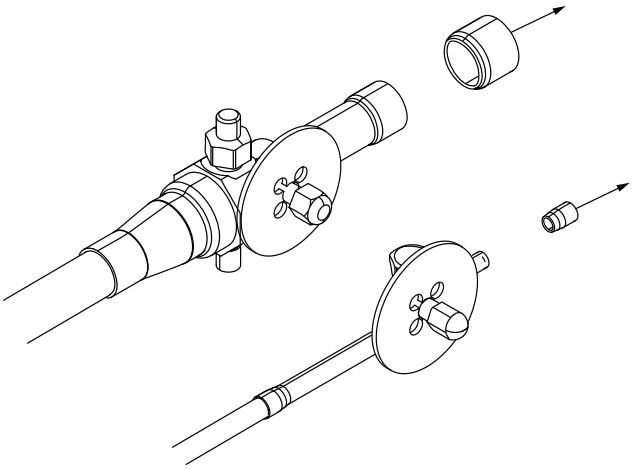

Figure 12. Removal of pressure cap and valve cores from service valves

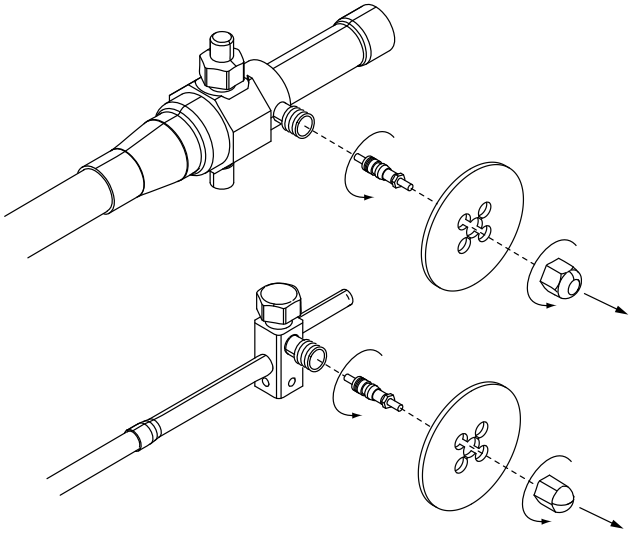

Figure 13. Purging of refrigerant lines

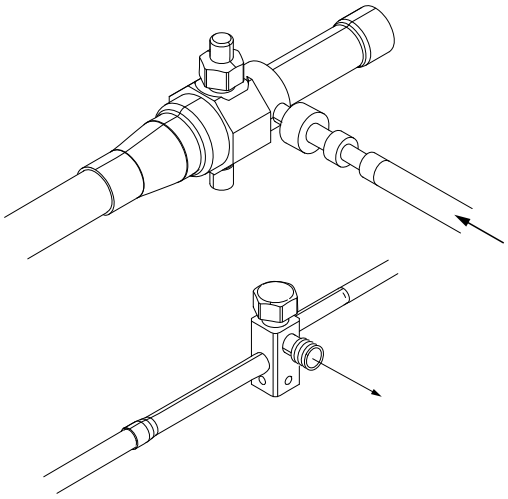

Figure 14. Wrapping of wet rag

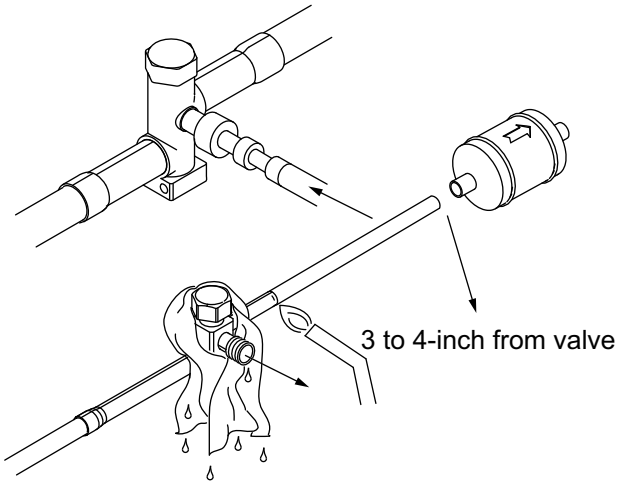

Figure 15. Re-installation of pressure valve cores and plastic tabs

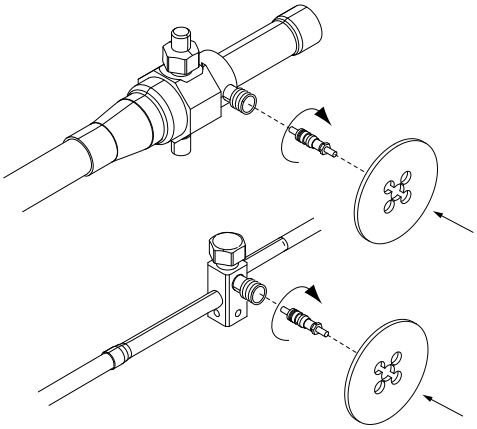

Refrigerant Line Leak Check

Check for Leaks

After completion of field piping for split systems, the field pipework shall be pressure tested with nitrogen and then vacuum tested prior to refrigerant charging.

Important:

1. *Under no circumstances shall potential sources of ignition be used in the searching for or detection of refrigerant leaks.*
2. *The following leak detection methods are deemed acceptable for all refrigerant systems:*
   - *Electronic leak detectors calibrated for R-454B (with a sensitivity of 5 grams/ year).*
   - *Bubble method.*
3. *The outdoor unit should not be tested higher than 450 psig for servicing or component replacement. The indoor unit and linesets should be tested to the max pressure specified on the outdoor or indoor unit nameplate. The service valves should be closed when pressure testing the evaporator coil and linesets to separate the outdoor unit from the indoor unit.*

Figure 16. Refrigerant line leak check

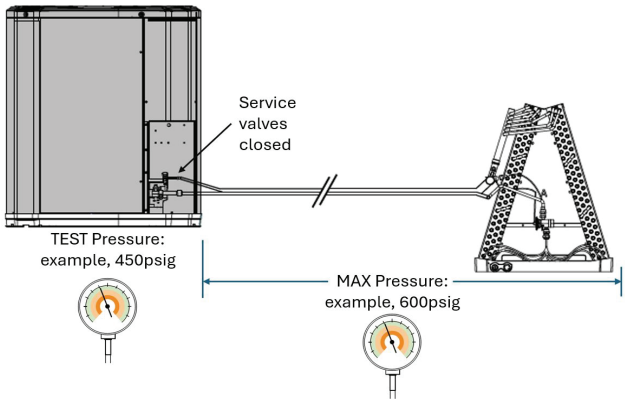

1. **Final Pressure Check:**

   Isolate the outdoor unit from the evaporator coil and linesets using the service valves. Pressurize the evaporator coil and linesets to the max pressure specified on the outdoor or indoor unit nameplate for a minimum of 60 minutes. Do not add additional refrigerant or test gas after reaching the evaporator coil specified pressure. The system should show no loss of pressure once pressurized. Once the pressure test is complete follow the steps for evacuation.

2. **Preliminary Pressure Check (*Optional):**

   Pressurize the refrigerant lines and evaporator coil to 150 psig using dry nitrogen. Check for leaks by using a soapy solution or bubbles at each brazed location. Remove pressure and repair any leaks before continuing.

Evacuation and Servicing

Evacuate the Refrigerant Lines and Indoor Coil

Important: *Do not open the service valves until the refrigerant lines and indoor coil leak check and evacuation are complete.*

1. Evacuate until the micron gauge reads no higher than 350 microns, then close the valve to the vacuum pump.

Figure 17. Observe micron gauge reading

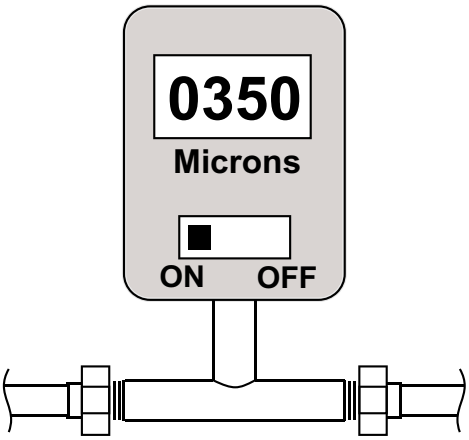

2. Observe the micron gauge. Evacuation is complete if the micron gauge does not rise above 500 microns in one minute.

Figure 18. Stop watch

3. Once evacuation is complete, clear the vacuum pump and micron gauge, then close the valve on the manifold gauge set.

Servicing

- If repairs must be made after system is charged, properly and safely remove or isolate refrigerant and purge the section of the system needing repair with nitrogen gas or oxygen-free nitrogen prior to opening the circuit.
- The Refrigerant charge shall be recovered into the correctly marked recovery cylinders.
- Ensure that the outlet for the vacuum pump is not close to any potential ignition sources and the ventilation is available.
- Prior to recharging the system, it shall be pressure-tested with the appropriate purging gas. The system shall be leak-tested on completion of charging but prior to commissioning. A follow up leak test shall be carried out prior to leaving the site.
- Ensure that only appropriate refrigerant recovery cylinders are employed. Ensure that the correct number of cylinders for holding the total system charge is available. Only use cylinders designated for the recovered refrigerant and labelled for the refrigerant. Cylinders shall be complete with pressure-relief valve and associated shut-off valves in good working order.
- A set of calibrated weighing scales shall be available and in good working order. Hoses shall be complete with leak-free disconnect couplings and in good condition. Ensure any associated electrical components are sealed.
- The recovered refrigerant shall be returned to the refrigerant supplier in the correct recovery cylinder. Do not mix refrigerants.
- If compressors or compressor oils are to be removed, ensure that they have been evacuated to an acceptable level to make certain that A2L refrigerant does not remain within the lubricant.

Service Valves

Open the Gas Service Valve First

Important: *Leak check and evacuation must be completed before opening the service valves.*

Note: *Do not vent refrigerant gases into the atmosphere.*

1. Remove valve stem cap.
2. Using an adjustable wrench, turn valve stem 1/4 turn counterclockwise to the fully open position.
3. Replace the valve stem cap to prevent leaks. Tighten finger tight plus an additional 1/6 turn.

Note: *Service valves may be ball or angle style.*

Figure 19. Gas service valve

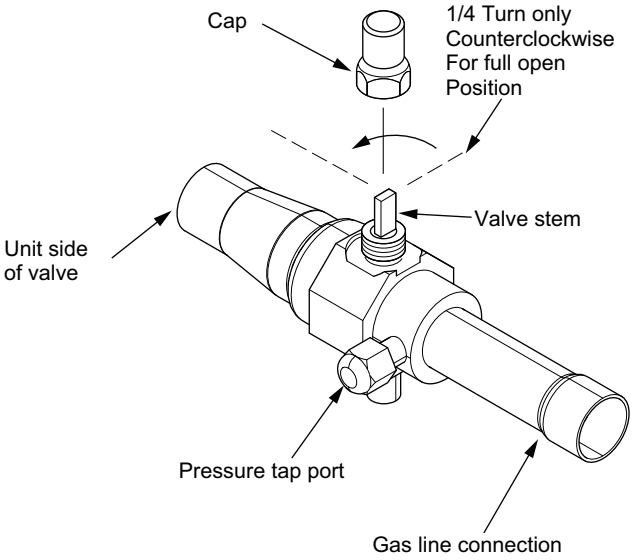

Open the Liquid Service Valve Second

⚠ WARNING

System Charge!

Failure to follow instructions below could result in abrupt release of system charge and could result in serious injury or property damage.

When opening the suction and liquid line service valve, turn the valve stem counterclockwise only until the stem contacts the rolled edge. Do not apply torque.

Important: *Leak check and evacuation must be completed before opening the service valves.*

1. Remove service valve cap.
2. Fully insert 3/16-inch hex wrench into the stem and back out counterclockwise until valve stem just touches the rolled edge (approximately five (5) turns).
3. Replace the valve cap to prevent leaks. Tighten finger tight plus an additional 1/6 turn.

Figure 20. Liquid service valve

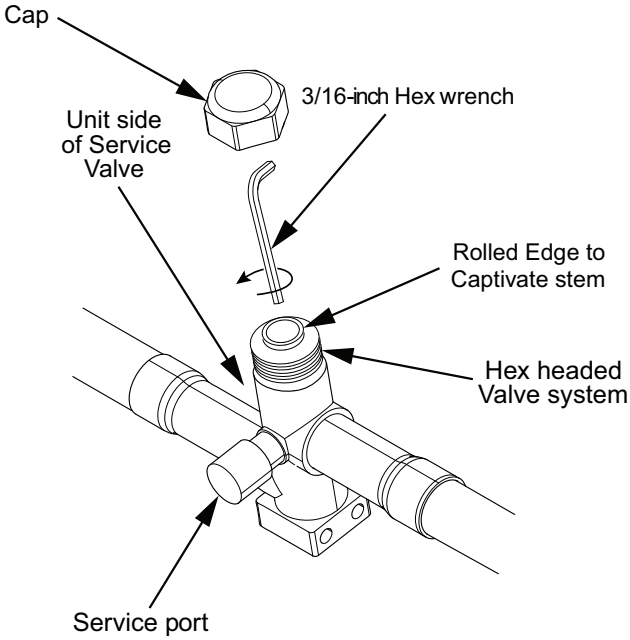

Electrical

Low Voltage

Low Voltage Maximum Wire Length

The following table defines the maximum total length of low voltage wiring from the outdoor unit, to the indoor unit, and to the thermostat.

Table 5. Low voltage maximum wire length

24 Volts	
Wire Size	**Max. Wire Length (ft.)**
18 AWG	150
16 AWG	225
14 AWG	300

Low Voltage Connection Diagrams

Figure 21. Single stage AC with 5TEM6

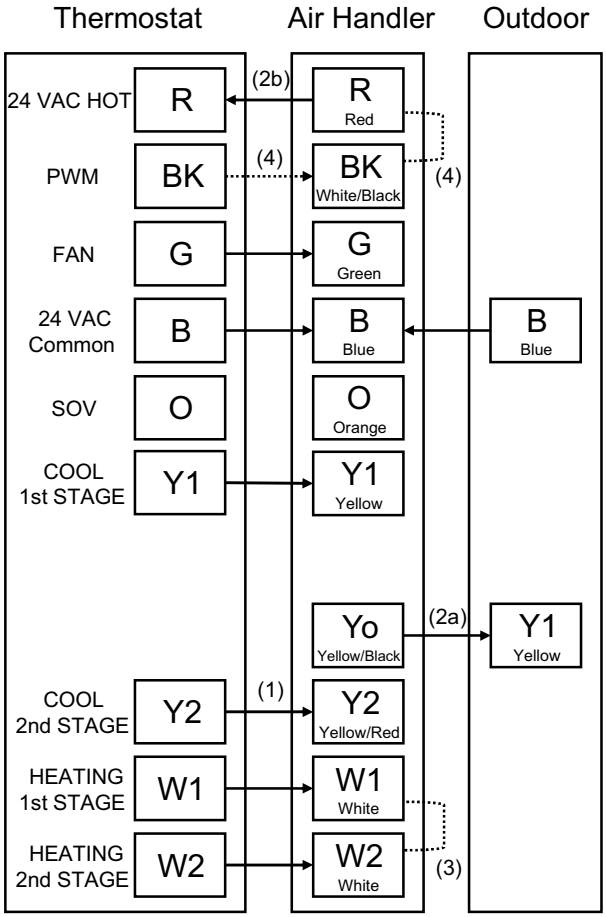

1. Separate Y1 and Y2 at air handler.
2. Condensate switch, float switch, leak detector, etc. installation options:
   a. Break Y1 to the outdoor so the outdoor shuts down but the indoor blower continues to run.
   b. Break R to the thermostat so the entire system shuts down.
3. If thermostat only has one stage of heat, jumper W1 and W2 together.
4. To achieve rated performance, connect Y2 from the thermostat to the air handler Y2.
5. For BK functionality with select Trane thermostats: Separate BK from either R at the fan control board or G at the air handler harness and connect BK.
6. If thermostat only has one stage of heat, jumper W1 and W2 together.

Notes:

- *BK dehumidification reduces indoor airflow when active.*
- *AC models do not require O at the outdoor.*
- *Use wire nuts for all pigtail connections and cap all unused wires.*

Figure 22. Single stage AC with 5TEM4

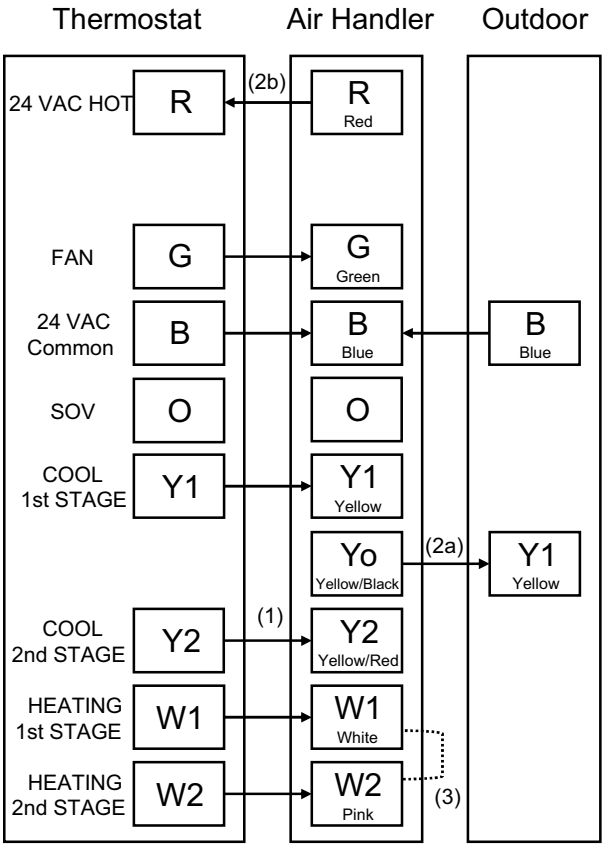

1. Separate Y1 and Y2 at air handler.
2. Condensate switch, float switch, leak detector, etc. installation options:

a. Break Y1 to the outdoor so the outdoor shuts down but the indoor blower continues to run.

b. Break R to the thermostat so the entire system shuts down.

3. If thermostat only has one stage of heat, jumper W1 and W2 together.
4. To achieve rated performance, connect Y2 from the thermostat to the air handler Y2.

Notes:

- *AC mode is do not require O at the outdoor.*
- *Use wire nuts for all pigtail connections and cap all unused wires.*

Figure 23. Single speed AC with 5TAM5

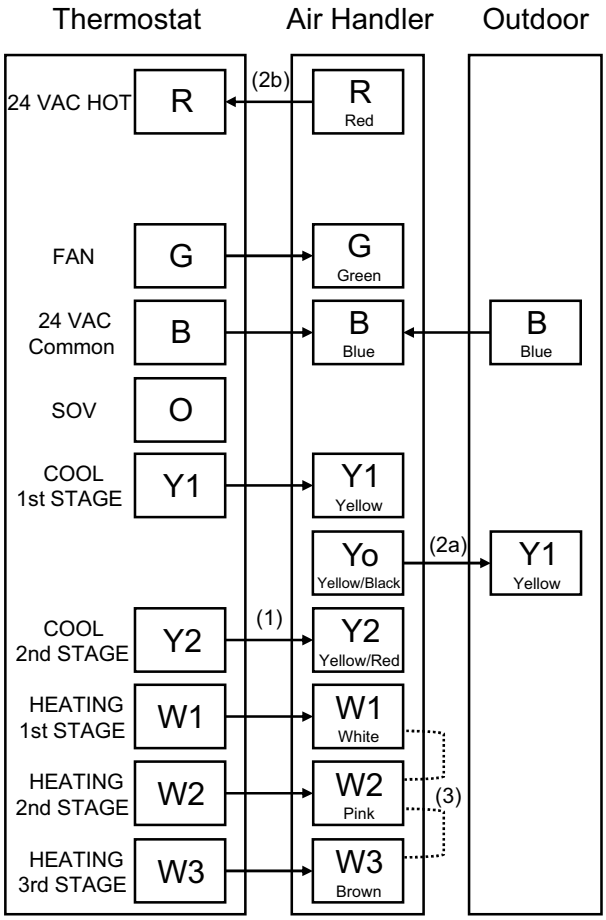

1. Separate Y1 and Y2 at air handler.
2. Condensate switch, float switch, leak detector, etc. installation options:

   a. Break Y1 to the outdoor so the outdoor shuts down but the indoor blower continues to run.

   b. Break R to the thermostat so the entire system shuts down.

3. If thermostat only has one stage of heat, jumper W1 and W2 together.
4. To achieve rated performance, connect Y2 from the thermostat to the air handler Y2.

Notes:

- *AC models do not require O at the outdoor.*
- *Use wire nuts for all pigtail connections and cap all unused wires.*

Figure 24. Single stage AC with Furnace

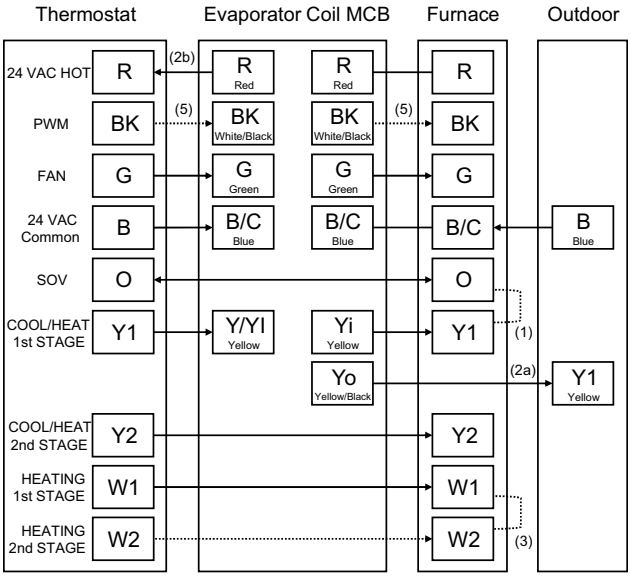

1. Leave jumper for AC only OD system.
2. Condensate switch, float switch, leak detector, etc. installation options:

   a. Break Y1 to the outdoor so the outdoor shuts down but the indoor blower continues to run.

   b. Break R to the thermostat so the entire system shuts down.

3. If thermostat only has one stage of heat, jumper W1 and W2 together.
4. To achieve rated performance, connect Y2 from the thermostat to the air handler Y2.
5. For BK functionality with select Trane thermostats: Cut BK jumper at the furnace board and connect BK.

Notes:

- *BK dehumidification reduces indoor airflow when active.*
- *AC models do not require O at the outdoor.*
- *Use wire nuts for all pigtail connections and cap all unused wires.*

Mitigation Board Guidelines

- The approved ID/OD combination will provide sufficient safe ventilation in case of a leak.
- Refer to Indoor Unit Installer's Guide for correct specifications on indoor unit install.

- All systems require mitigation boards so an altitude adjustment factor may be required.
- Mitigation Control Board needs to be included in an A2L System.

High Voltage

High Voltage Power Supply

⚠ WARNING

Live Electrical Components!

Failure to follow all electrical safety precautions when exposed to live electrical components could result in death or serious injury.

When it is necessary to work with live electrical components, have a qualified licensed electrician or other individual who has been properly trained in handling live electrical components perform these tasks.

The high voltage power supply must agree with the equipment nameplate.

Power wiring must comply with national, state, and local codes.

Follow instructions on unit wiring diagram located on the inside of the control box cover and in the Installation, Operation, and Maintenance (IOM) document included with the unit.

Figure 25. Nameplate location

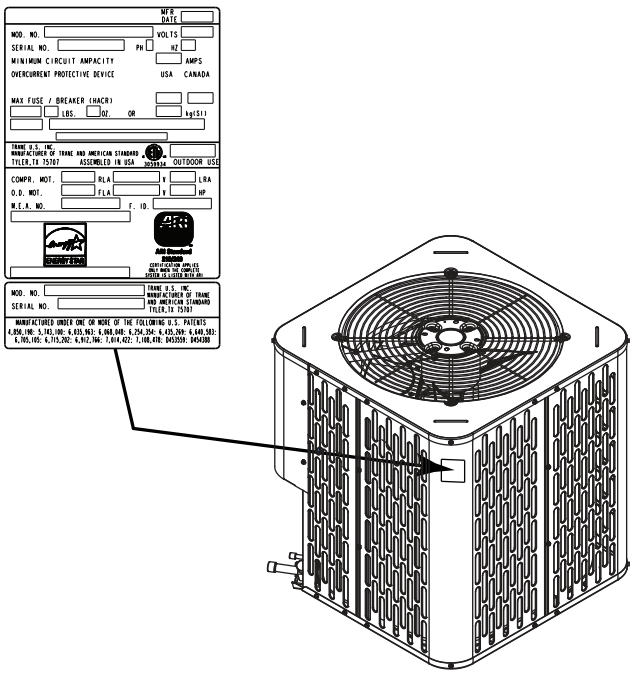

High Voltage Disconnect Switch

Install a separate disconnect switch at the outdoor unit.

For high voltage connections, flexible electrical conduct is recommended whenever vibration transmission may create a noise problem within the structure.

High Voltage Ground

Ground the outdoor unit per National, State, and Local code requirements.

⚠ WARNING

Safety Hazard!

Failure to follow instructions below could result in death or serious injury, and property damage.

Confirm the cabling is protected from wear and tear, corrosion, excessive pressure, vibration, sharp edges, and any other adverse environmental effects.

System Start-Up

1. Confirm that “Refrigerant Line Brazing,” p. 11 through “High Voltage,” p. 18 have been completed.
2. Turn on the disconnect(s) to apply power to the indoor and outdoor units.
3. Wait one hour before starting the unit if the compressor crankcase heater accessory is used and the outdoor ambient is below 70º F.
4. Set system thermostat to ON.

System Charge Adjustment

Note: *For systems using a indoor piston metering device, refer to the Superheat charging method and chart. For systems using a TXV or EEV indoor metering device, refer to Subcool charging method and charts.*

Temperature Measurements

Check the outdoor temperatures.

Subcooling (in cooling mode) is the only recommended method of charging above 55ºF ambient outdoor temperature.

Figure 26. Outdoor temperature

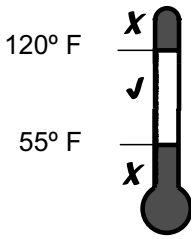

Note: *For Superheat (In Cooling Mode), refer to the Table 10, p. 22.*

For best results the indoor temperature should be kept between 70ºF to 80ºF.

Figure 27. Indoor temperature

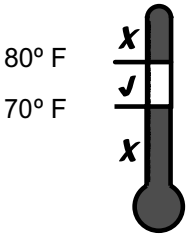

Note: *It is important to return in the spring or summer to accurately charge the system in the cooling mode when outdoor ambient temperature is above 55ºF.*

Subcooling Charging in Cooling (Above 55º F Outdoor Temp.)

1. Determine the refrigerant line total length and lift.

   Total Line Length = _____ Ft.

   Vertical Change (Lift) = _____ Ft.

Figure 28. Refrigerant line total length and lift

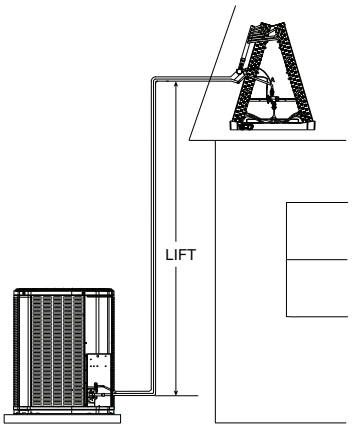

2. Determine the final subcooling value using total line length and lift measured in Step 1. and the tables below.

Table 6. Maximum line length and rise (models - 018B, 024B, 030B and 036B)

018B, 024B, 030B and 036B			
Vapor Line	**Liquid Line**	**Liquid Line**	**Lift**
5/8	5/16	150	50
3/4	5/16	150	50
5/8	3/8	150	50
3/4	3/8	150	50
Note:			
Ratings/Primary			
Alternate Lineset			

Table 7. Maximum line length and rise (models - 042B and 048B)

042B and 048B			
Vapor Line	**Liquid Line**	**Liquid Line**	**Lift**
3/4	5/16	150	50
7/8	5/16	150	50
3/4	3/8	150	50
7/8	3/8	150	50
Note:			
Ratings/Primary			
Alternate Lineset			

Table 8. Maximum line length and rise (model - 060B)

060B			
Vapor Line	**Liquid Line**	**Liquid Line**	**Lift**
7/8	3/8	150	50
1-1/8	3/8	75	50
7/8	3/8	150	50
1-1/8	3/8	75	50
Note:			
Ratings/Primary			
Alternate Lineset			

Table 9. R-454B refrigerant charging chart

Liquid Temp (°F)	Design Subcooling (°F)						
	8	9	10	11	12	13	14
	Liquid Gauge Pressure (PSI)						
55	170	172	175	178	181	184	187
60	184	187	190	194	197	200	203
65	200	203	206	210	213	217	220
70	217	220	223	227	230	234	238
75	234	238	241	245	249	252	256
80	252	256	260	264	268	272	276
85	272	276	280	284	288	292	297
90	292	297	301	305	309	314	318
95	314	318	323	327	332	336	341
100	336	341	346	351	355	360	365
105	360	365	370	375	380	385	390
110	385	390	396	401	406	412	417
115	412	417	422	428	433	439	445
120	439	445	450	456	462	468	474
125	468	474	480	486	492	498	504

Design Subcooling Value = _____ º F

(from nameplate or Service Facts)

Subcooling Correction = _____ º F

Final Subcooling Value = _____ º F

Charging the Unit

1. Attain Proper Gauge Pressure. Using the Standard R-454B Subcool Charging Chart, adjust refrigerant level to attain proper gauge pressure.

Note: *Use bubble point, per the included chart, for calculating subcooling.*

Add refrigerant if the Liquid Gauge Pressure is lower than the chart value

a. Connect gauges to refrigerant bottle and unit as illustrated.
b. Purge all hoses.
c. Place refrigerant bottle on a scale and then open bottle.
d. Stop adding refrigerant when liquid line refrigerant and Liquid Gauge Pressure match the charging chart.

Notes:

- *Recover refrigerant if the Liquid Gauge Pressure is higher than the chart value.*
- *Ensure that contamination of different refrigerants does not occur when using charging equipment. Cylinders shall be kept in an appropriate position according to the instructions. Ensure that the refrigeration system is earthed prior to charging the system with refrigerant.*

Figure 29. Charging the unit

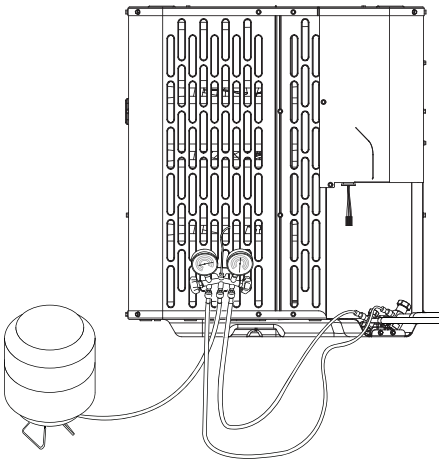

2. Stabilize the system.
   a. Wait 20 minutes for the system condition to stabilize between adjustments.

Figure 30. Stop watch

Note: *When the Liquid Line Temperature and Gauge Pressure approximately match the chart, the system is properly charged.*

b. Remove gauges.

c. Replace service port caps to prevent leaks. Tighten finger tight plus an additional 1/6 turn.

3. Record System Information for reference. Record system pressures and temperatures after charging is complete.

   Outdoor model number = _____

   Measured Suction Line Temp = _____ º F

   Measured Outdoor Ambient = _____ º F

   Liquid Gauge Pressure = _____ PSIG

   Measured Indoor Ambient = _____ º F

   Suction Gauge Pressure = _____ PSIG

   Measured Liquid Line Temp = _____ º F

4. Complete the 'Total System Charge' charge rating label below and label located on the outside of the unit with a permanent marker.

   a. Charge added at Factory = _____ lb/oz

   b. Charge added at install = _____ lb/oz

   c. Total System Charge (a + b) = _____ lb/oz

Table 10. Fixed orifice superheat charging table

	Indoor Wet Bulb Temp (F)																													
Outdoor Dry Bulb Temp. (F)		50	51	52	53	54	55	56	57	58	59	60	61	62	63	64	65	66	67	68	69	70	71	72	73	74	75	76	77	78
	55	7	9	10	11	12	14	15	17	18	20	21	23	24	26	27	29	30	—	—	—	—	—	—	—	—	—	—	—	—
	60	5	7	8	9	10	12	13	15	16	18	19	21	22	24	25	27	28	30	31	—	—	—	—	—	—	—	—	—	—
	65	—	—	4	6	8	10	11	13	14	16	17	18	19	21	22	24	25	27	28	27	31	—	—	—	—	—	—	—	—
	70	—	—	—	—	5	7	8	10	11	13	14	16	17	18	19	21	22	24	25	27	28	30	31	—	—	—	—	—	—
	75	—	—	—	—	—	—	5	6	7	9	10	12	14	16	18	19	21	22	24	26	28	29	31	32	—	—	—	—	—
	80	—	—	—	—	—	—	—	—	4	6	7	9	10	11	12	14	16	18	19	21	23	25	26	28	29	31	33	—	—
	85	—	—	—	—	—	—	—	—	—	—	4	6	7	9	10	13	14	16	18	20	21	23	24	26	28	29	30	31	32
	90	—	—	—	—	—	—	—	—	—	—	—	—	4	6	8	10	11	13	14	16	18	20	22	24	25	27	28	30	31
	95	—	—	—	—	—	—	—	—	—	—	—	—	—	—	4	6	8	10	13	14	16	18	20	22	23	25	26	28	29
	100	—	—	—	—	—	—	—	—	—	—	—	—	—	—	—	—	6	8	10	12	13	16	18	20	21	23	25	27	29
	105	—	—	—	—	—	—	—	—	—	—	—	—	—	—	—	—	4	6	7	9	11	13	15	18	20	22	24	26	28
	110	—	—	—	—	—	—	—	—	—	—	—	—	—	—	—	—	—	—	4	7	9	11	13	16	18	21	23	26	28
	115	—	—	—	—	—	—	—	—	—	—	—	—	—	—	—	—	—	—	—	—	6	9	12	14	16	19	21	24	26

Using a digital psychrometer, measure the return air wet-bulb temperature at the unit just before the coil. Also measure the outdoor dry-bulb temperature. Use these temperatures to locate the target superheat on the charging table. Do not attempt to charge the system if these conditions fall outside of this charging table.

Add refrigerant to decrease total superheat. remove refrigerant to increase total superheat. Always allow 10 to 15 minutes of operation after any refrigerant or air flow change prior to determining the final superheat.

Weigh-In Method for Charging

Weigh-In Method can be used for the initial installation, or anytime a system charge is being replaced. Weigh-In Method can also be used when power is not available to the equipment site or operating conditions (indoor/outdoor temperatures) are not in range to verify with the subcooling charging method.

Calculating Charge Using the Weigh-In Method

1. Measure in feet the distance between the outdoor unit and the indoor unit and record on Line 1. Include the

entire length of the line from the service valve to the IDU (minus 15 ft).

Line length (ft) = _____

2. Enter the charge multiplier (0.47 oz./ft for 3/8-inch and 0.30 oz./ft for 5/16-inch).
3. Multiply the total length of refrigerant tubing (Line 1) times the value on Step 2. Record the result on Line 3 of the Worksheet.

   Step 1 x Step 2 = _____
4. This is the amount of refrigerant to weigh-in prior to opening the service valves.

   Refrigerant = _____
5. Complete the 'Total System Charge' charge rating label below and label located on the outside of the unit with a permanent marker.

Note: *Complete the 'Total System Charge' chart when final charging is complete.*

   a. Charge added at Factory = _____ lb/ozc.
   b. Charge added at install = _____ lb/oz
   c. Total System Charge (a + b) = _____ lb/oz
6. Return to site for adjustment.

Important: *Return in the spring or summer to accurately charge the system in the cooling mode with outdoor ambient above 55° F.*

Checkout Procedures

Operational and Checkout Procedures

Final phases of this installation are the unit Operational and Checkout Procedures. To obtain proper performance, all units must be operated and charge adjustments made.

Important: *Perform a final unit inspection to be sure that factory tubing has not shifted during shipment. Adjust tubing if necessary so tubes do not rub against each other when the unit runs. Also be sure that wiring connections are tight and properly secured.*

After installation has been completed, it is recommended that the entire system be checked against the following list:

- ☐ Leak check refrigerant lines.
- ☐ Properly insulate suction lines and fittings.
- ☐ Properly secure and isolate all refrigerant lines.
- ☐ Seal passages through masonry. If mortar is used, prevent mortar from coming into direct contact with copper tubing.
- ☐ Verify that all electrical connections are tight.
- ☐ Observe outdoor fan during on cycle for clearance and smooth operation.
- ☐ Be sure that indoor coil drain line drains freely. Pour water into drain pan.
- ☐ Be sure that supply registers and return grilles are open and unobstructed.
- ☐ Be sure that a return air filter is installed.
- ☐ Be sure that the correct airflow setting is used. (Indoor blower motor).
- ☐ Operate complete system in each mode to ensure safe operation.
- ☐ Confirm refrigerant leak detection system is operational.
- ☐ Confirm refrigerant quantity is marked on OD unit.

Wiring Diagrams

Figure 31. Wiring diagrams - all models

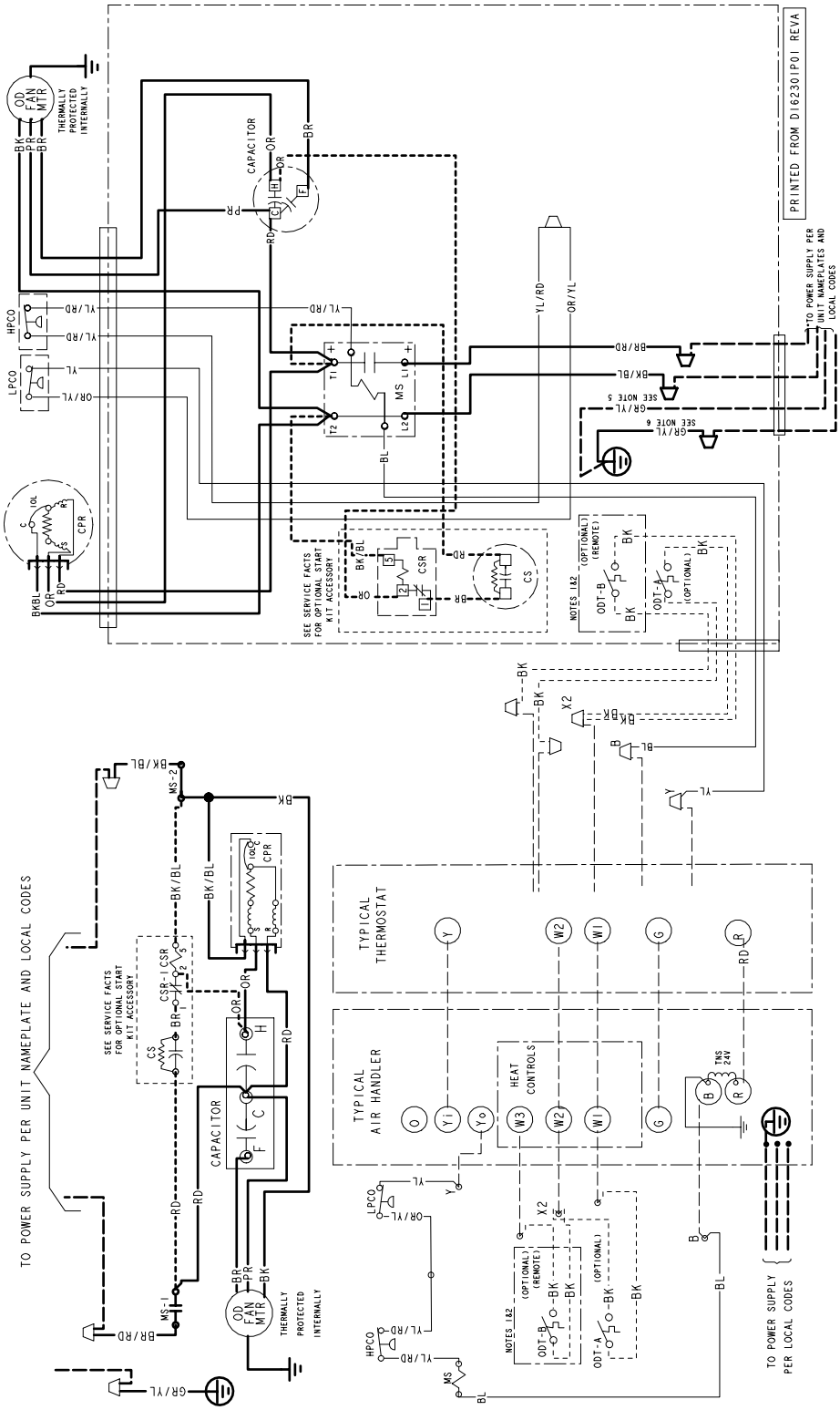

Figure 32. Wiring diagrams - notes and legend

NOTES:

1. IF ODT-B IS NOT USED. ADD JUMPER BETWEEN W2 & W3 AT AIR HANDLER. IF USED, ODT-B MUST BE MOUNTED REMOTE OF CONTROL BOX IN AN APPROVED WEATHER PROOF ENCLOSURE.
2. IF ODT-A IS NOT USED. ADD JUMPER BETWEEN W1 & W2 AT AIR HANDLER.
3. LOW VOLTAGE (24 V) FIELD WIRING MUST BE 18 AWG MINIMUM.
4. USE COPPER CONDUCTORS ONLY!
5. FIELD GROUND MUST BE ATTACHED TO THE GROUND LUG ON THE RUNTRU AND AMERISTAR UNITS.
6. GROUND CONNECTION FOR TRANE/ AMERICAN STANDARD ONLY.

FOR CANADIAN INSTALLATIONS
POUR INSTALLATIONS CANADIENNES

CAUTION: NOT SUITABLE FOR USE ON SYSTEMS EXCEEDING 150V-TO-GROUND
ATTENTION:NE CONVIENT PAS AUX INSTALLATIONS DE PLUS DE 150 V A LA TERRE

LEGEND ADDED NOTES AND TABLE FOR PAPER DETAILS.

CF	FAN CAPACITOR
CN	WIRE CONNECTOR
CPR	COMPRESSOR
CR	RUN CAPACITOR
CS	STARTING CAPACITOR
CSR	CAPACITOR SWITCHING RELAY
ODT	OUTDOOR THERMOSTAT
HPCO	HIGH PRESSURE CUTOUT SWITCH
LPCO	LOW PRESSURE CUTOUT SWITCH
MS	COMPRESSOR MOTOR CONTACTOR
TNS	TRANSFORMER
IOL	INTERNAL OVERLOAD PROTECTOR

24 V / LINE V — FACTORY WIRING

24 V / LINE V — FIELD WIRING

FIELD INSTALLED FACTORY WIRING

COLOR OF WIRE

BK/BL

COLOR OF MARKER

BK	BLACK	RD	RED	OR	ORANGE
BL	BLUE	WH	WHITE	GR	GREEN
BR	BROWN	YL	YELLOW	PR	PURPLE
PK	PINK				

MAGNETIC COIL

GROUND

JUNCTION

CAPACITOR

WIRE NUT OR

TERMINAL

TRANSFORMER

POL.PLUG FEMALE HOUSING (MALE TERMINALS)

POL. PLUG MALE HOUSING (FEMALE TERMINALS)

TERMINAL BLOCK/BOARD

RELAY CONTACT (N.O)

RELAY CONTACT (N.C)

THERMISTOR

TEMP ACTUATED SWITCH

INTERNAL OVERLOAD PROTECTION

PRESSURE ACTUATED SWITCH

RESISTER OR HEATING ELEMENT

MOTOR WINDING

Pressure Curves

Cooling performance can be checked when the outdoor temperature is above 65° F.

To check cooling performance, select the proper indoor CFM, allow pressures to equalize. Measure indoor wet bulb temperature, outdoor temperature, liquid and suction pressures.

On the plots:

1. Locate outdoor temperature
2. Locate indoor wet bulb
3. Find intersection of OD temperature and ID W.B
4. Read liquid or suction pressure in left column.

Figure 33. Pressure curves - model A5AC3018B1

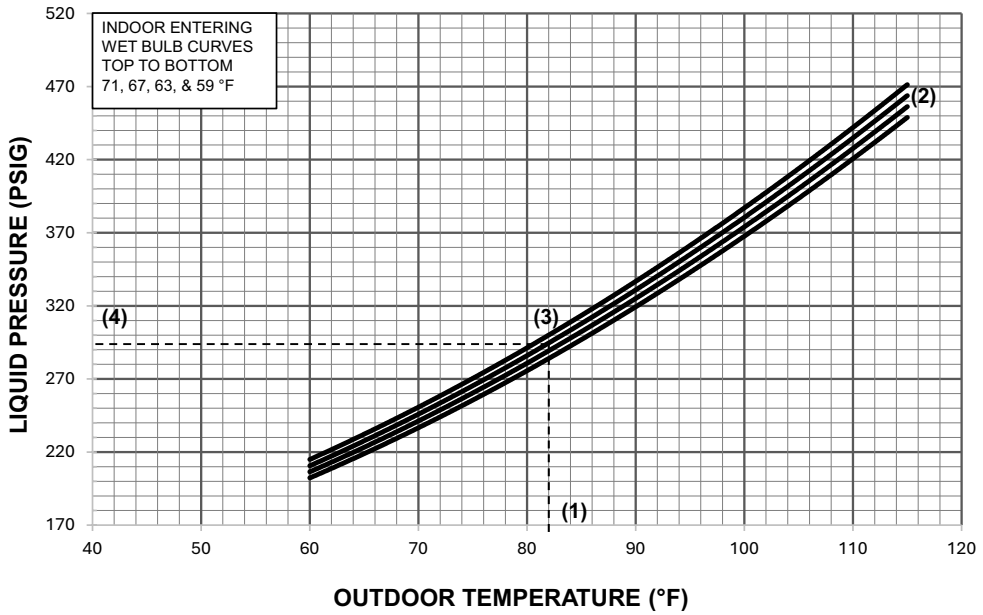

OD Model	Cooling @SCFM
A5AC3018B1	650

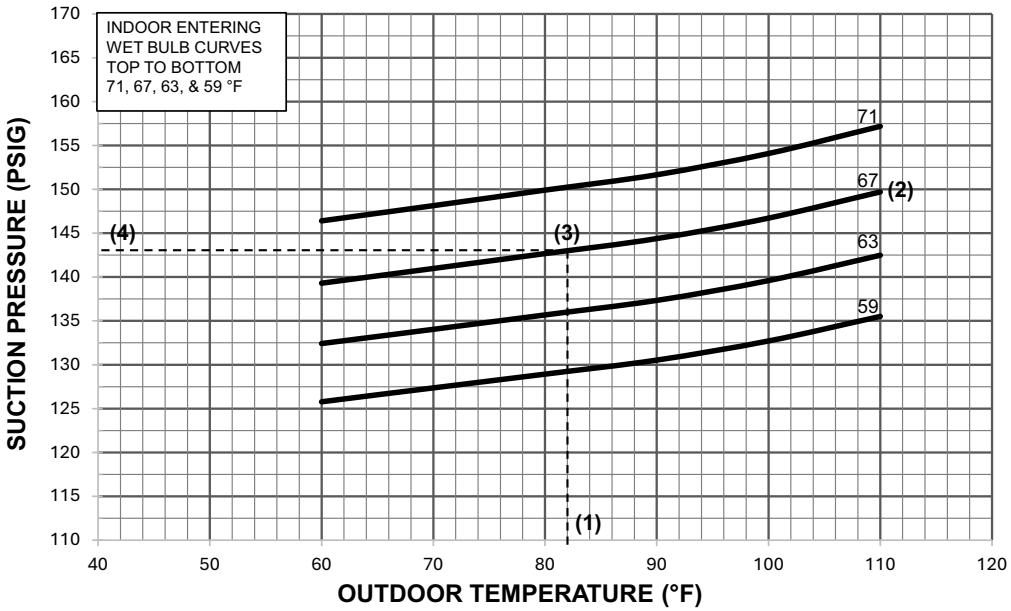

Figure 34. Pressure curves - models A5AC3024B1 and A5AC3042B1

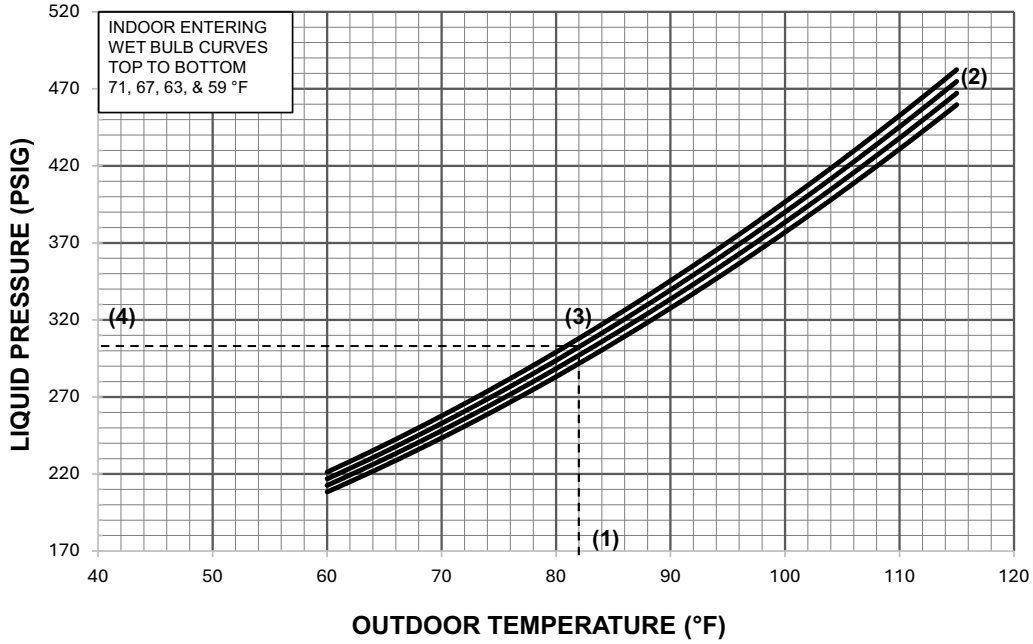

OD Model	Cooling @SCFM
A5AC3024B1	750
A5AC3042B1	1400

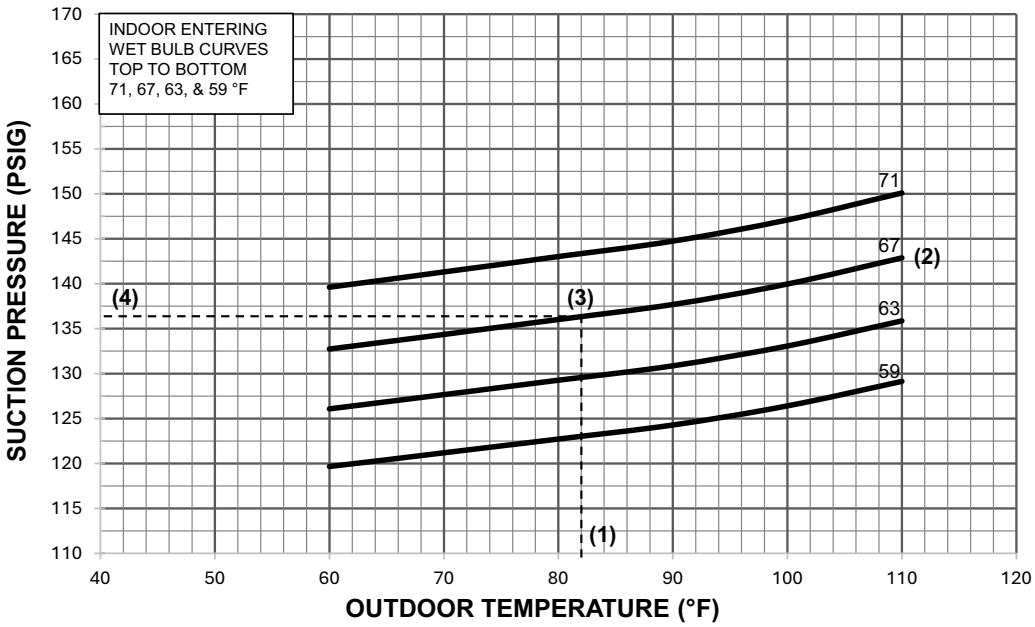

Figure 35. Pressure curves - models A5AC3030B1, A5AC3036B1 and A5AC3060B1

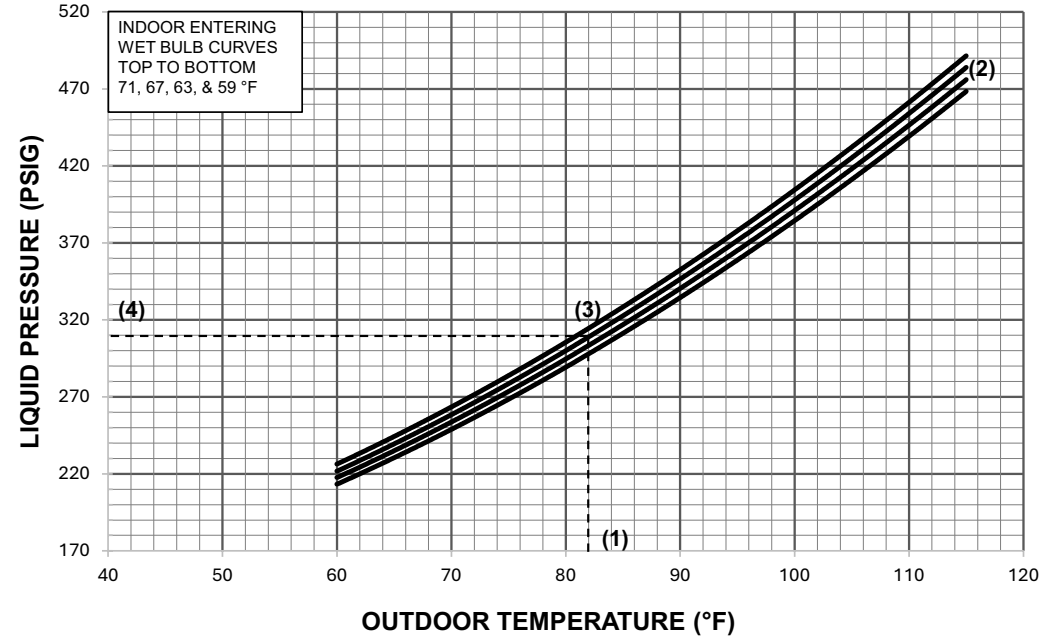

OD Model	Cooling @SCFM
A5AC3030B1	1000
A5AC3036B1	1200
A5AC3060B1	1700

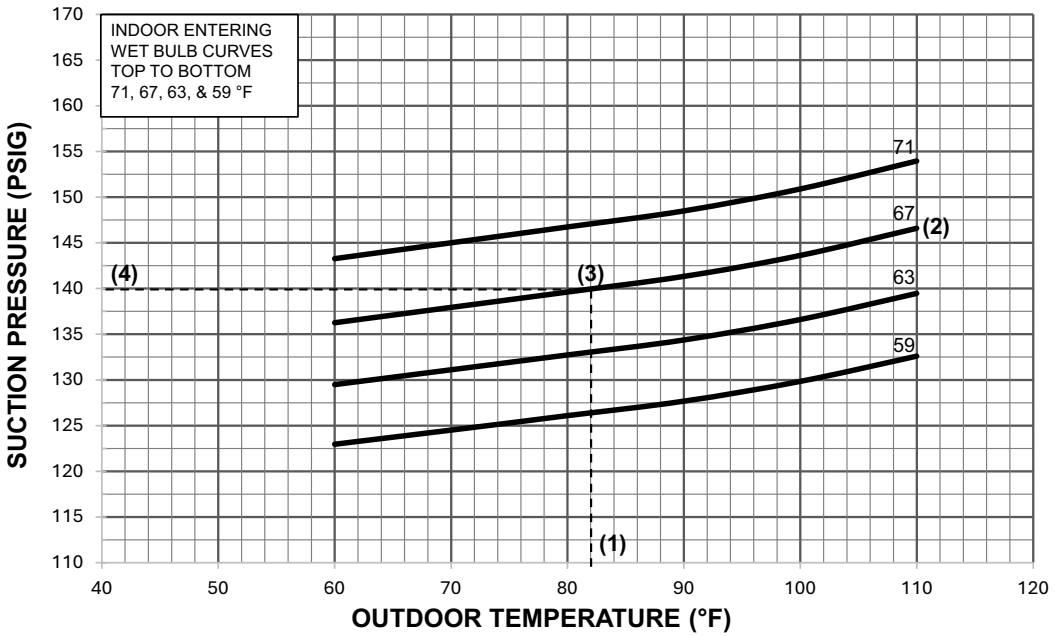

Figure 36. Pressure curves - model A5AC3048B1

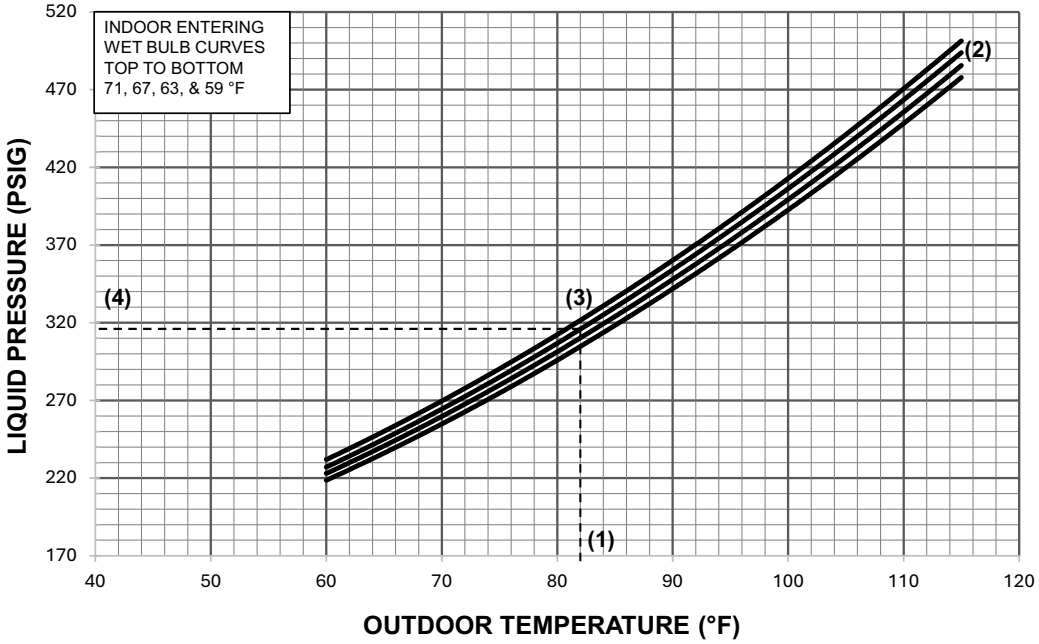

OD Model	Cooling @SCFM
A5AC3048B1	1700

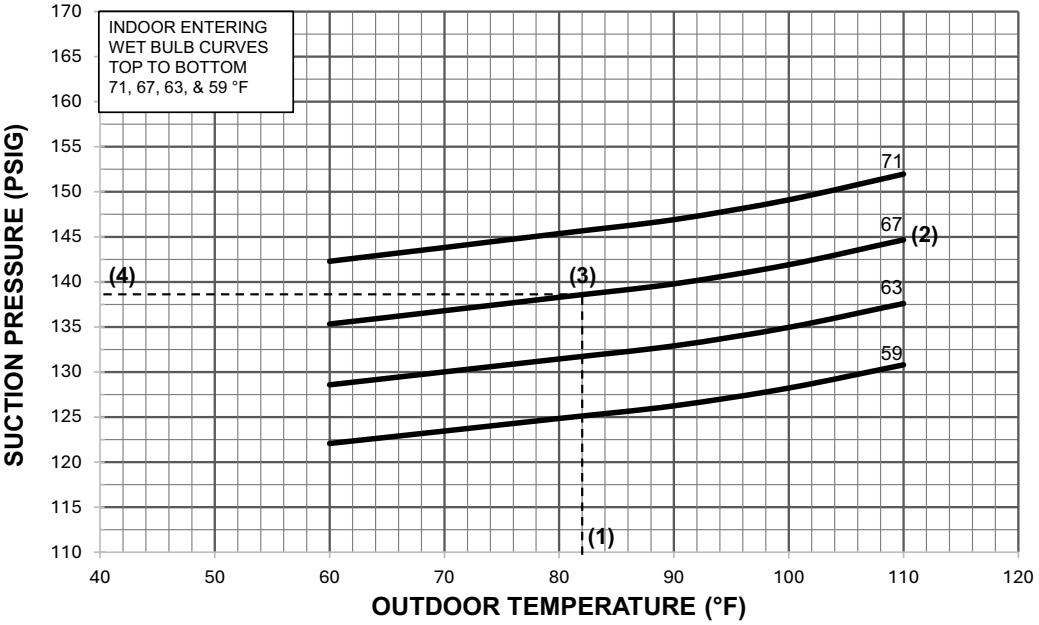

Refrigeration Circuits

Figure 37. Refrigeration cycle for models 018, 024, 030, 036, 042 and 048

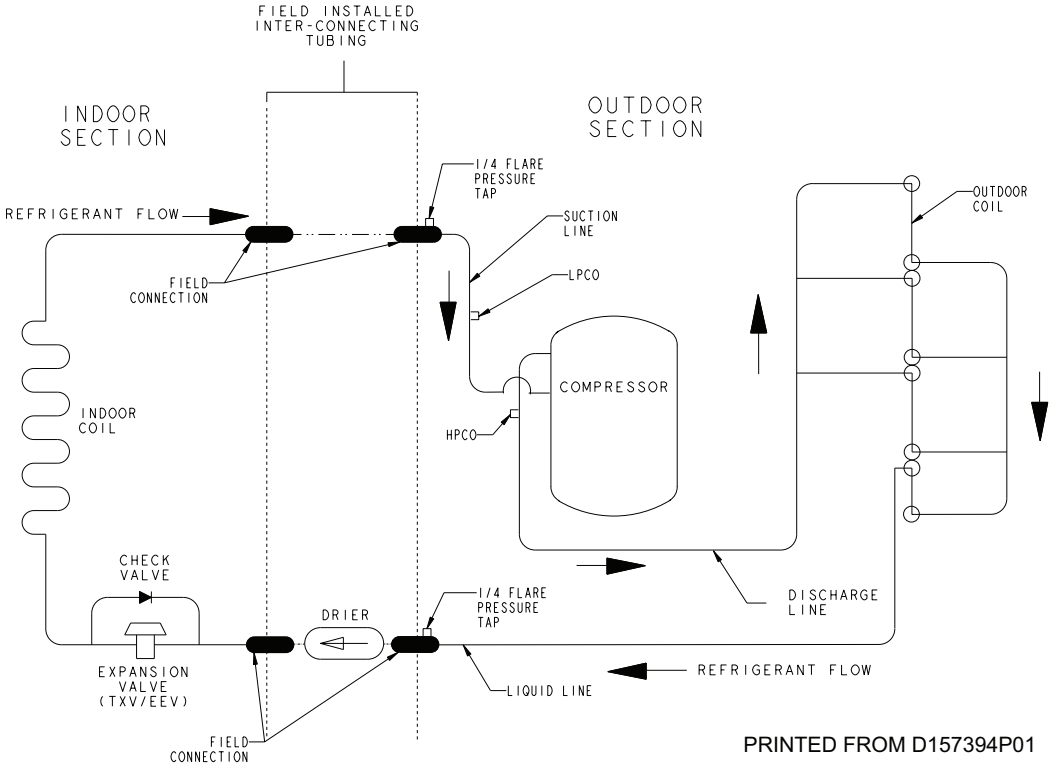

Figure 38. Refrigeration cycle for model 060

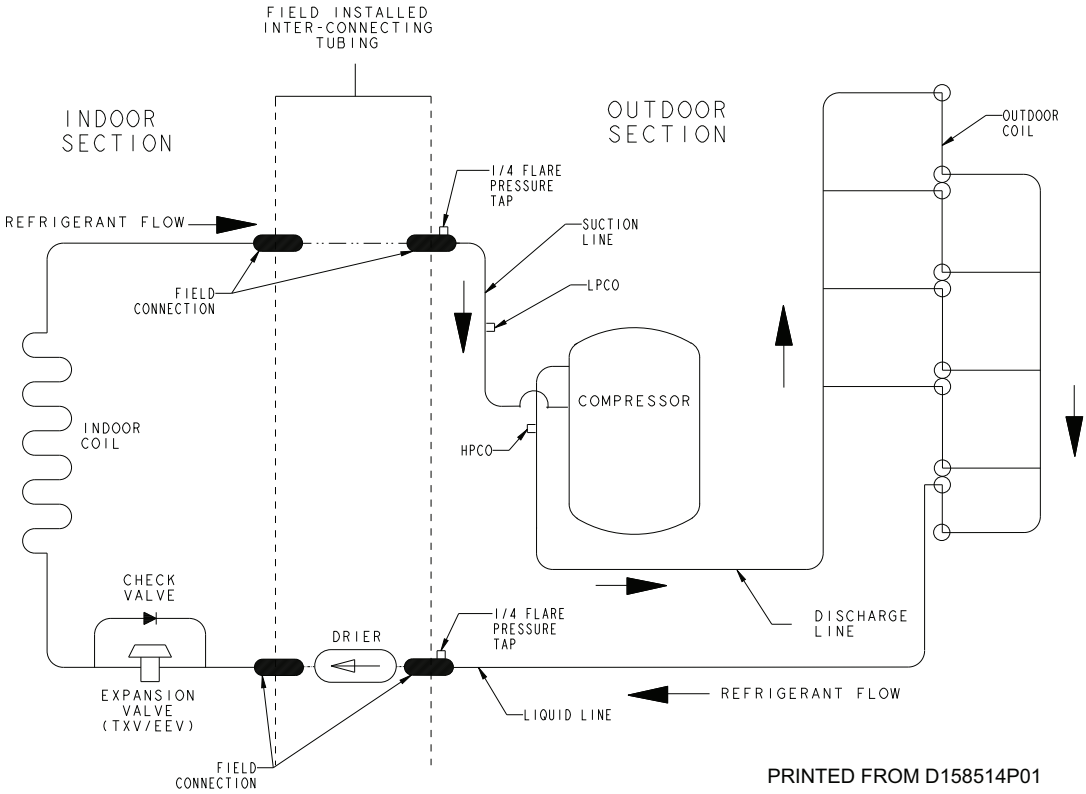

Refrigerant Detection System

The approved ID/OD combination will provide sufficient safe ventilation.

Airflow provided is sufficient to cover minimum room area including adjustments for altitude. All systems require a refrigerant detection system so no altitude adjustment factors are required.

Installer must ensure refrigerant detection system is connected and placed in appropriate orientation per application.

The control system power shall not be interrupted to ensure the refrigerant detection system is always functioning.

Please reference Indoor Unit installers guide for correct specification on refrigerant detection system.

Notes

About Trane and American Standard Heating and Air Conditioning

Trane and American Standard create comfortable, energy efficient indoor environments for residential applications. For more information, please visit www.trane.com or www.americanstandardair.com.

The AHRI Certified mark indicates company participation in the AHRI Certification program. For verification of individual certified products, go to ahridirectory.org.

The manufacturer has a policy of continuous data improvement and it reserves the right to change design and specifications without notice. We are committed to using environmentally conscious print practices.

ODR-SVX001C-EN 09 Jan 2026
Supersedes ODR-SVX001B-EN (September 2025)

©2026